Fuse-switch disconnector selection

Fupact ISFT100N to ISFT630

PB104311.eps

ISFT100N.

62193A_SE.eps

ISFT100.

62194A_SE.eps

ISFT160.

62195A_SE.eps

ISFT630.

Fuse-switch disconnectors				
Number of poles / type of fuse-link			IEC60 269-2-1	Section 1
Electrical characteristics as defined by IEC 60947-1 / IEC 60947-3 and EN 60947-1 / EN 60947-3				
Conventional thermal current (A)	In free air	**Ith**	at 40 °C	
	Maximum fuse power dissipation (W)			
	In enclosure	**Ithe**	at 40 °C	
	Maximum fuse power dissipation (W)			
Rated insulation voltage (V)		**Ui**	AC 50/60 Hz / DC	
Rated impulse withstand voltage (kV)		**Uimp**		
Rated operational voltage (V)		**Ue**	AC 50/60 Hz	
			DC	
Rated operational voltage AC20 and DC20 (V)		**Ue**		
Rated operational current (A)		**Ie**	AC 50/60 Hz	
				220/240 V
				380/400 V
				440/480 V (2)
				500 V
				660/690 V
			DC/poles in series	
				125 V /nbr of poles
				220 V /nbr of poles
				440 V /nbr of poles
Rated duties		Uninterrupted duty		
Rated short-circuit breaking capacity (kA rms)/Rated short-circuit making capacity (kA peak)/Fuse-link In (A) (3)		**Icn/Icm/In**		415 V
				500 V
				690 V
Endurance (category B) (CO cycles)			Mechanical	
			Electrical AC	AC22B 415 V
				AC23B 415 V
				AC21B 690 V
Suitability for isolation				
Positive contact indication				
Pollution degree				
Control				
Direct front rotary handle (operator-dependent opening and closing)				
Locking	Padlocks			
	Lead seal			
Indication auxiliaries				
Auxiliary contacts				
Fuse monitor				
Blown-fuse indicator				
Installation and connection accessories				
Possible mounting positions	Horizontal			
	Vertical			
Bare cable connectors				
Other connectors	For bare Cu/Al cables			
	For flexible bars			
Distribution connectors				
Lugs for copper cables				
Insulated comb busbar covers				
Insulated comb covers				
Incoming connector for comb busbars				
Terminal shields				
Dimensions and weight				
Overall dimensions H x W x D (mm)		3P		
Approximate weight without fuse-links (kg)		3P		

(1) With 95 mm² connector.
(2) Suitable for 480 V NEMA.
(3) Fuse-switch disconnectors with fuse-links.
(4) AC23B: 100 A.

	ISFT100N		ISFT100		ISFT160		ISFT250		ISFT400		ISFT630	
	3P/DIN (NH)		3P/DIN (NH)		3P/DIN (NH)		3P/DIN (NH)		3P/DIN (NH)		3P/DIN (NH)	
	100		100/160 (1)		160		250		400		630	
	7.5		9		12		23		34		48	
	100		100/160 (1)		160		250		400		630	
	7.5		9		12		23		34		48	
	800		690		800		800		800		800	
	8		6		8		8		8		8	
	690		690		690		690		690		690	
	440		440		440		440		440		440	
	690		690		800		800		800		800	
	AC21B	**AC22B**	**AC21B**	**AC22B**	**AC21B**	**AC22B**	**AC21B**	**AC22B**	**AC21B**	**AC22B**	**AC21B**	**AC22B**
	100	100 (4)	100/160 (1)	100/160 (1)	160	160	250	250	400	400	630	630
	100	100 (4)	100/160 (1)	100/160 (1)	160	160	250	250	400	400	630	630
	100	100	100	-	160	-	250	-	400	-	630	-
	100	100	100	-	100	-	250	-	400	-	630	-
	100	-	100	-	100	-	250	-	400	-	630	-
	DC21B	**DC22B**	**DC21B**	**DC22B**	**DC21B**	**DC22B**	**DC21B**	**DC22B**	**DC21B**	**DC22B**	**DC21B**	**DC22B**
	100/3	100/3	100/1	-	160/1	-	250/1	-	400/1	-	630/1	-
	100/3	100/3	100/1	-	160/1	-	250/1	-	400/1	-	630/1	-
	100/3	100/3	100/1	-	160/2	-	250/2	-	400/2	-	630/2	-
	■		■		■		■		■		■	
	80 / 176 / 100		80 / 176 / 100		50 / 105 / 160		50 / 105 / 250		50 / 105 / 400		50 / 105 / 630	
	50 / 105 / 100		50 / 105 / 100		50 / 105 / 160		50 / 105 / 250		50 / 105 / 400		50 / 105 / 630	
	50 / 105 / 100		50 / 105 / 100		50 / 105 / 100		50 / 105 / 200		50 / 105 / 315		50 / 105 / 500	
	2000		2000		1600		1600		1000		1000	
	300		300		200		200		200		200	
	300		-		-		-		-		-	
	300		300		200		200		200		200	
	■		■		■		■		■		■	
	■		■		■		■		■		■	
	3		3		3		3		3		3	
	■		■		■		■		■		■	
	-		-		-		-		-		-	
	■		■		■		■		■		■	
	■		■		■		■		■		■	
	-		-		■		■		■		■	
	-		-		■		-		-		-	
	■		■		■		■		■		■	
	■		■		■		■		■		■	
	■		■		■		-		-		-	
	-		-		■		■		■		■	
	-		-		■		■		■		■	
	-		■		■		-		-		-	
	-		-		■		■		■		■	
	-		■		-		-		-		-	
	-		■		-		-		-		-	
	-		■		-		-		-		-	
	-		-		■		■		■		■	
	216 x 53 x 82		141 x 89 x 71		163 x 107 x 80		246 x 186 x 110		271 x 210 x 127		271 x 250 x 132	
	0.54		0.46		0.64		2.06		2.96		4.00	

Fuse-switch disconnector selection

Fupact ISFT100N to ISFT630

PB104311.eps

ISFT100N.

62193A_SE.eps

ISFT100.

62194A_SE.eps

ISFT160.

62195A_SE.eps

ISFT630.

Fuse-switch disconnectors		
Type of fuse-link		
	DIN NH000	
	DIN NH00	
	DIN NH1	
	DIN NH2	
	DIN NH3	
Installation and connection		
Symmetrical rail		
Direct connection on backplate		
Push-on connection to 60 mm busbars		
Hook-on connection to 60 mm busbars		
Hook-on connection to 100 mm busbars		
Tightening torque (Nm)		
Temperature derating (with gG fuse-link) (1) (2)		
"Vertical mounting" fuse-links in vertical position	**Ith** (A)	40 °C
		45 °C
		50 °C
		55 °C
		60 °C
		65 °C
		70 °C
"Horizontal mounting" fuse-links in horizontal position	**Ith** (A)	40 °C
		45 °C
		50 °C
		55 °C
		60 °C
		65 °C
		70 °C

(1) Derating data is based on:
- the maximum rating for fuse-links intended for the device,
- maximum power dissipation.
(2) For installation on a ceiling, derate an additional 10 %.
(3) With 100/160 A fuse-link.

	ISFT100N	ISFT100	ISFT160	ISFT250	ISFT400	ISFT630
	■	■	■	-	-	-
	-	-	■	-	-	-
	-	-	-	■	-	-
	-	-	-	-	■	-
	-	-	-	-	-	■
	■	■	-	-	-	
	■	■	■	■	■	■
	-	-	■	■	-	-
	■	-	■	■	■	■
	-	-	-	■	■	■
	see page B-4					
	100	100/160 (3)	160	250	400	630
	95	95/152	152	238	380	599
	90	90/144	144	225	360	567
	85	85/136	136	213	340	536
	80	80/128	128	200	320	504
	75	75/120	120	188	300	473
	70	70/112	112	175	280	441
	100	100/160 (3)	160	250	400	630
	95	95/152	152	238	380	599
	90	90/144	144	225	360	567
	85	85/136	136	213	340	536
	80	80/128	128	200	320	504
	75	75/120	120	188	300	473
	70	70/112	112	175	280	441

Accessories and auxiliaries
Fupact ISFT100N

DB124906.eps

DB124907.eps

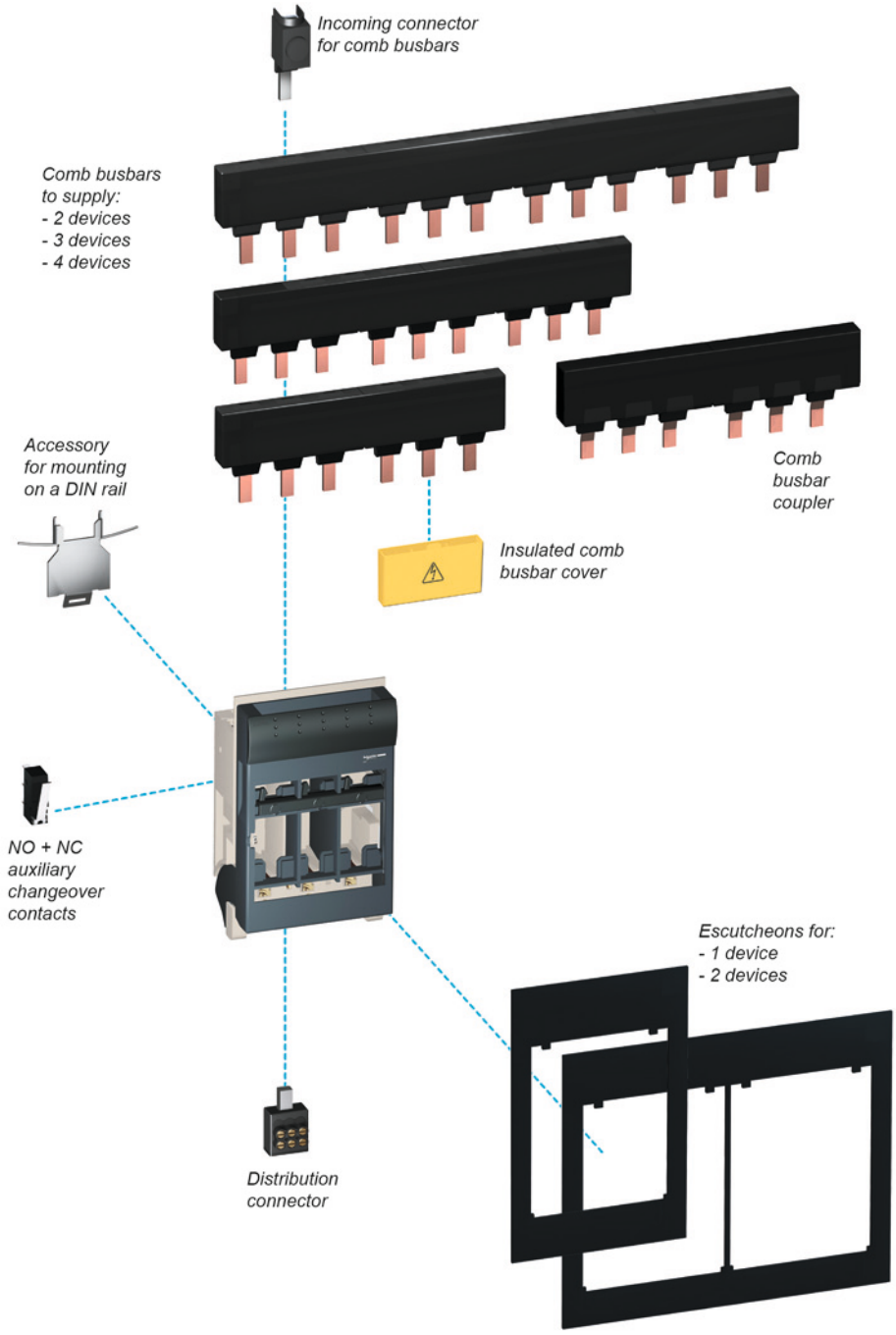

Accessories and auxiliaries
Fupact ISFT160

PB105058.eps

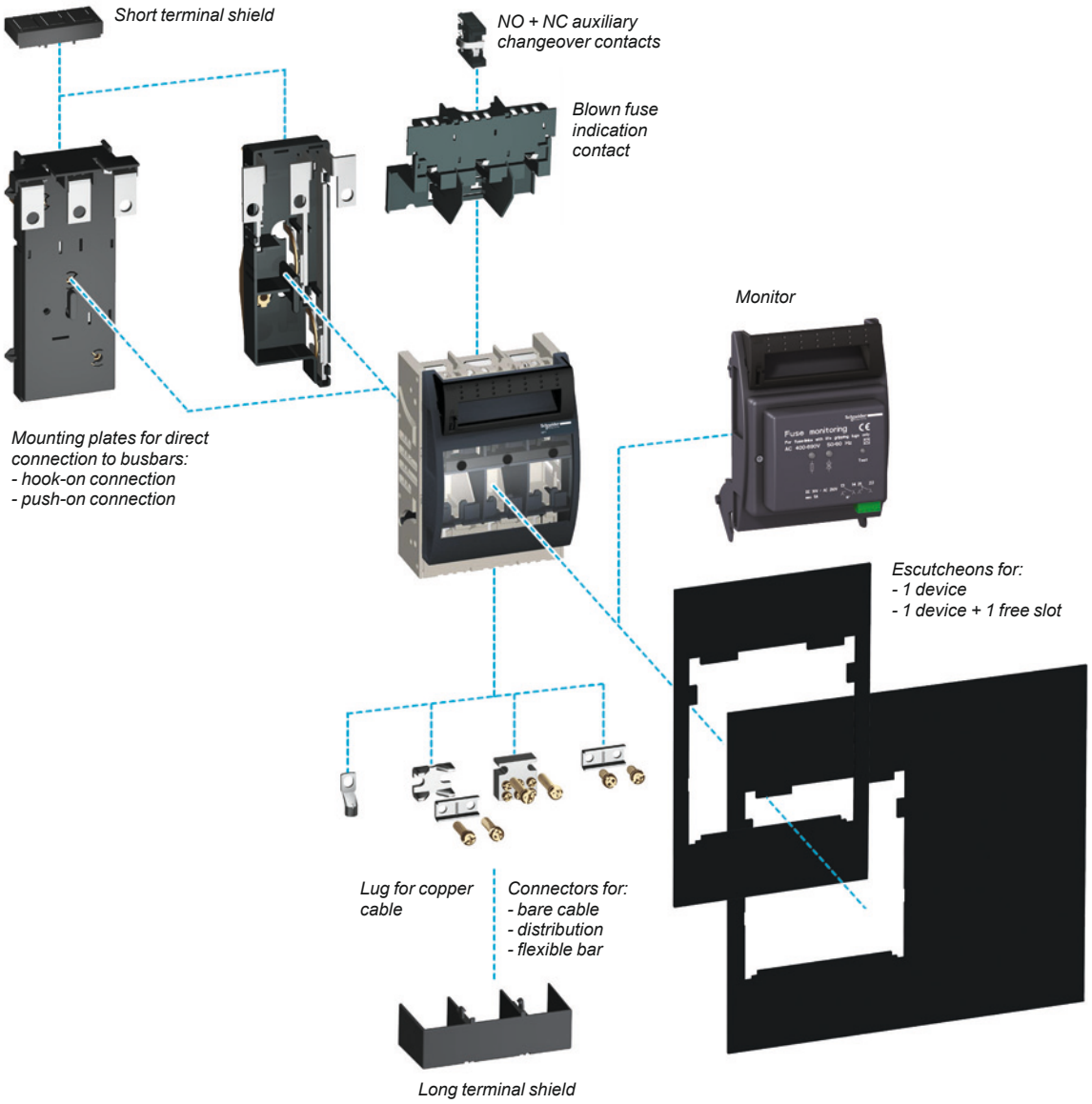

PB105057.eps

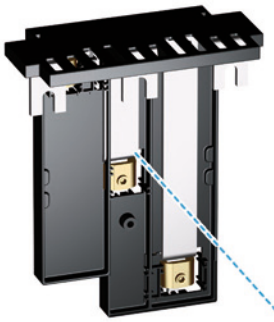

Mounting plates for direct connection to busbars:
- hook-on connection
- push-on connection (ISFT250)

NO + NC auxiliary changeover contacts

Monitor

Lug for copper cable

Connectors for:
- bare cable
- flexible bar

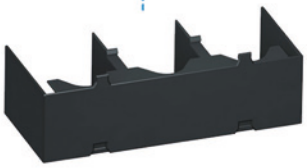

Terminal shield

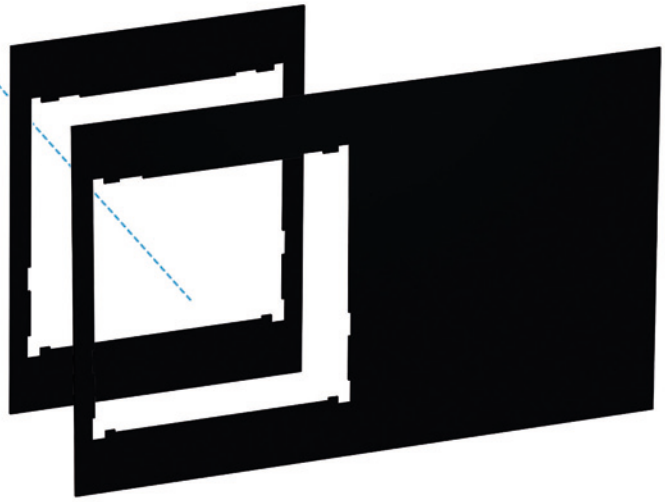

Escutcheons for:
- 1 device
- 1 device + 1 free slot (ISFT250/400)

Connection and accessories

Fupact ISFT100N to ISFT630 - Connection

Fupact fuse-switch disconnectors can supply distribution circuits via either the upstream or downstream terminals.

Devices intended for connection to busbars are configured as standard for distribution via the downstream terminals.

ISFT fusegear is equipped as standard with connectors or terminals for front connection of:
- bare cables for ISFT100N to ISFT160 devices
- cables with lugs for ISFT160 to 630 devices
- flexible bars for ISFT160 to 630 devices.

	ISFT100N	ISFT100	ISFT160	ISFT250	ISFT400/ ISFT630
Cables					
Connector (as standard)	2.5 to 50 mm²	1.5 to 50 mm²		-	
Lug to terminal	-	-	95 mm²	100 to 300 mm²	
Connector to terminal	-	-	1.5 to 95 mm²	6 to 150 mm²	6 to 240 mm²
Flexible bars					
Connector	-	-	12 x 6 mm²	16 x 15 mm²	21 x 15 mm²

DB120179.eps

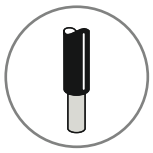

62315a_2.eps

Distribution connector.

62316a_2.eps

Incoming connector for comb busbar.

62317a_3.eps

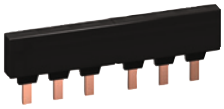

Comb busbar.

ISFT100N fusegear

DB120626.eps

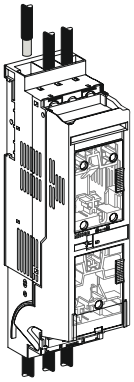

ISFT100 fusegear

DB120180.eps

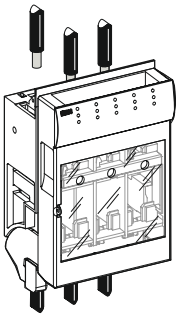

DB120181.eps

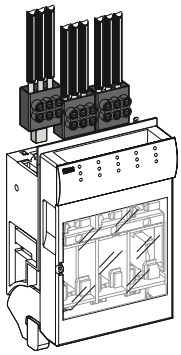

DB120182.eps

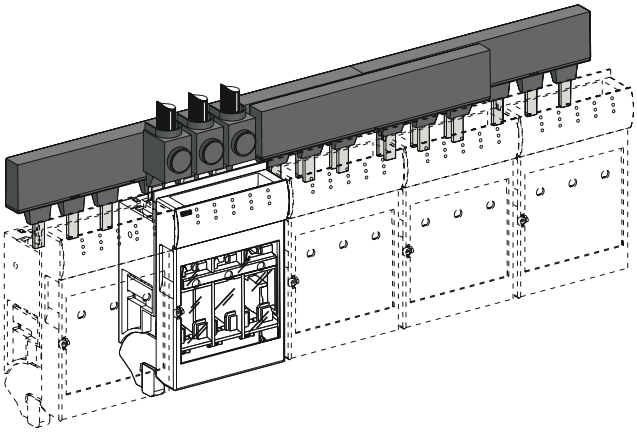

DB120162.eps

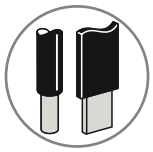

62330a_1-2_r.eps

Lug for copper cables.

62318a_2-7.eps

Distribution connector.

62319a_2-5.eps

Connector for bare Cu/Al cables.

62320a_2.eps

Connector for flexible bars.

ISFT160 fusegear

DB120163.eps

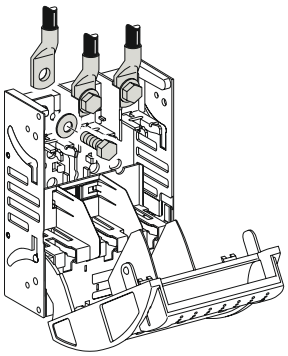

DB120164.eps

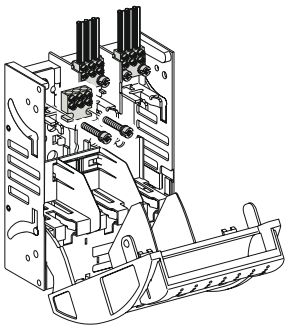

DB120165.eps

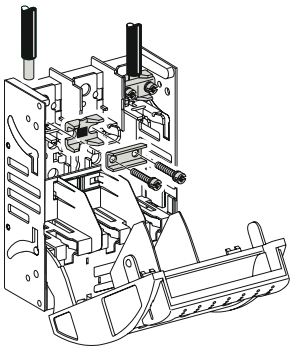

DB120166.eps

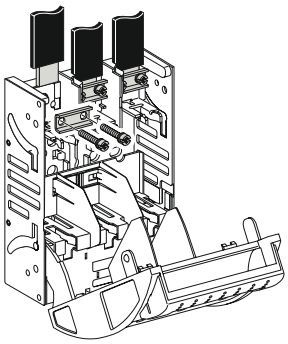

DB120162.eps

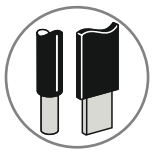

62330a_1-2_r.eps

Lug for copper cables.

62321a_3.eps

Connector for bare Cu/Al cables.

62322a_3.eps

Connector for flexible bars.

ISFT250/400/630 fusegear

DB120167.eps

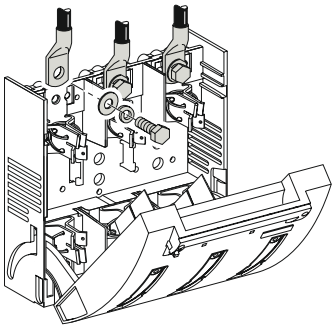

DB120168.eps

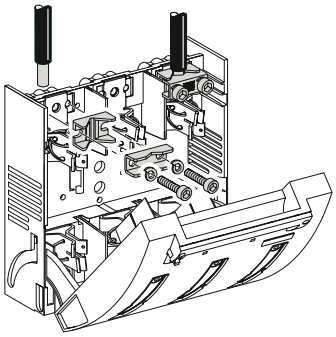

DB120169.eps

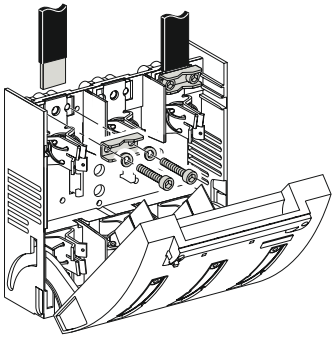

Connection and accessories

Fupact ISFT160 to ISFT630 - Reverse distribution

Fupact fuse-switch disconnectors designed for connection to busbars supply distribution circuits via the downstream terminals as standard.
In the case of ISFT160 to ISFT630 devices, simple installation operations allow power to be supplied to the distribution circuits from upstream.
In the case of ISFT100N devices, the method of distribution cannot be reversed simply by changing the direction of the mounting. There are separate references for each particular case.

62338a_4-8.eps

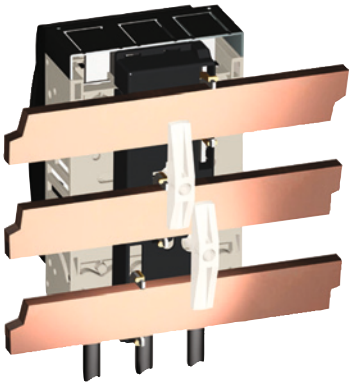

ISFT160 (push-on connection).

DB120103.eps

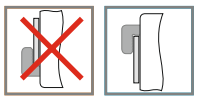

Hook-on connection:
the orientation of the hooks on the busbars is always the same, whether the distribution circuits are connected to the upstream or downstream terminals.
The fuse-switch disconnectors must physically hang on the busbars.

DB120104.eps

Symmetrical slots on the side of the base make it possible to raise and lower the cover that forms the fuse-carrier.

To reverse supply, depending on the model, simply turn 180°:
- either the base with its connection kit
- or the connection kit alone.

For fusegear with a fuse monitor, the fuse monitor cover must be changed given that different versions are used depending on whether supply is via the upstream or downstream terminals.

Operation to reverse supply (upstream/downstream terminals)

		180° rotation				Change
		Base	Connection kit	Hooks	Shields for power circuits	Fuse monitor cover
		DB401353.eps 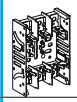 DB401354.eps	DB401355.eps	DB401356.eps	DB108668.eps	
	ISFT160	yes	no	yes	no	yes
	ISFT250 to 630	no	yes	yes	no	yes
	ISFT160	yes	-	-	no	yes
	ISFT250	yes	-	-	no	yes

Fusegear with hook-on connection

ISFT160/250

DB120105.eps

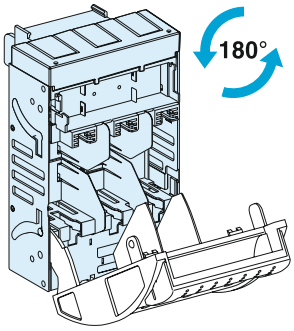

DB120106.eps

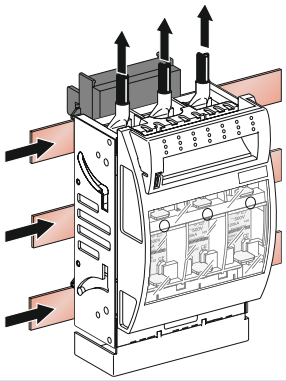

ISFT400/630

DB120107.eps

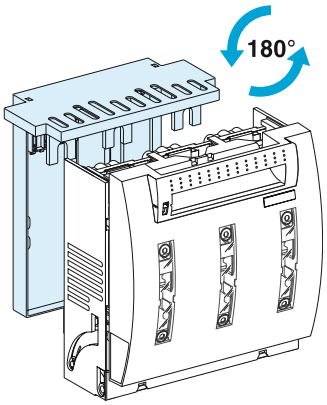

DB120108.eps

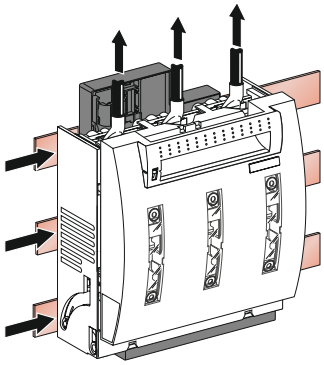

Fusegear with press-on connection

ISFT160/250

DB120109.eps

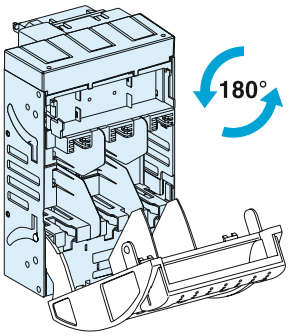

DB120110.eps

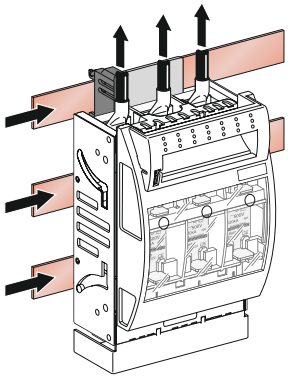

ISFT100 fusegear devices with insulated comb busbar couplers make it possible to supply a number of devices via a single incomer.

PB104855.eps

ISFT100 (comb busbar + insulated cover).

Combinations:
- ■ 2 devices:
- □ 1 incomer for 2 outgoers
- ■ 3 devices [1]:
- □ 1 incomer for 3 outgoers
- ■ 4 devices [1]:
- □ 1 incomer for 4 outgoers
- ■ 5 devices [1]:
- □ 1 incomer for 5 outgoers.

(1) For combinations of more than 2 ISFT100 devices, it is recommended to connect incoming power to the second device to reduce temperature rise.

DB124586.eps

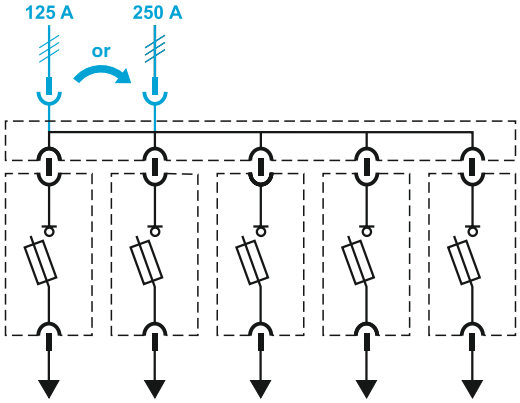

Supplying a number of devices via comb busbars

Incoming connectors are used for the upstream power cables.
Power is distributed to the other devices via comb busbars or a combination of comb busbars. Downstream connection of distribution circuits is done via cables.

2 devices

DB120118.eps

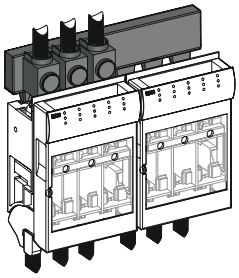

3 devices

DB120119.eps

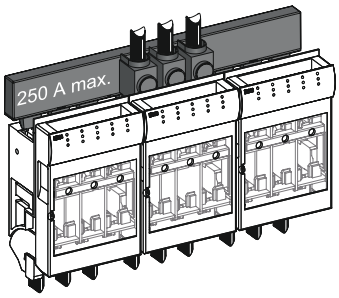

4 devices

DB120120.eps

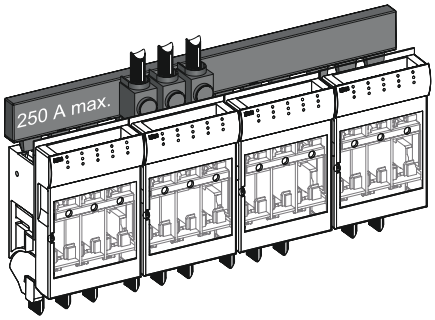

5 devices (3 + 2 + comb busbars)

DB120121.eps

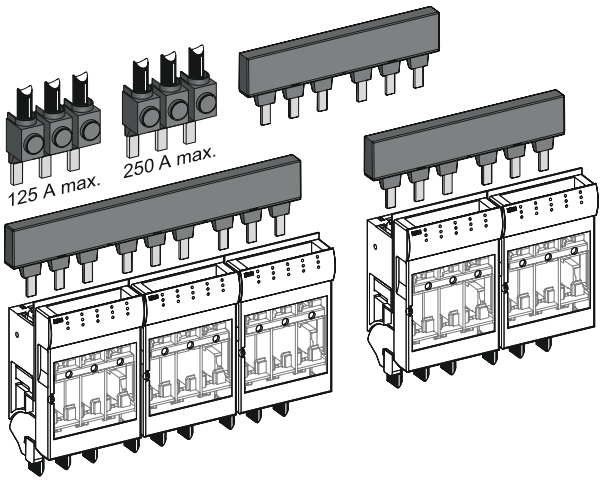

Connection and accessories

Fupact ISFT100N, ISFT160 to ISFT630 - Different installation systems

Many connection and supply possibilities

Supplying a set of busbars from an incoming device

DB120177.eps

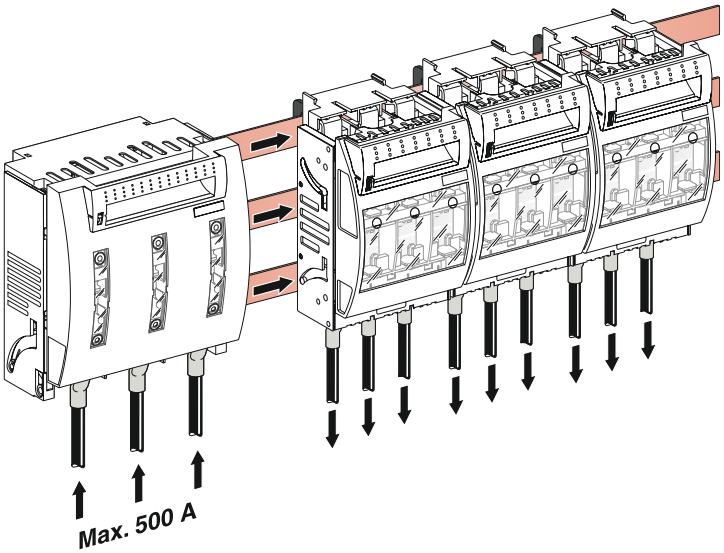

Supplying two sets of busbars from an incoming device

DB120178.eps

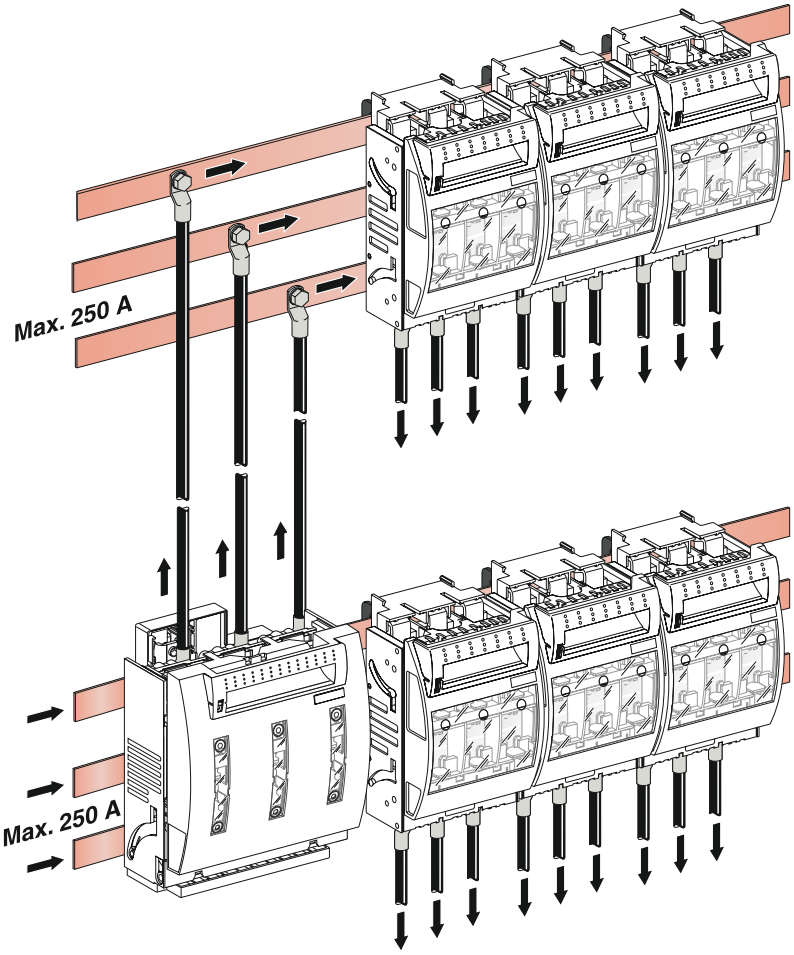

Insulation accessories used for protection against direct contacts with the power circuits.
Single and double escutcheons with 1 free slot on ISFT160-250-400 enable 2, 3 or 4 devices (and more if the width of the switchboard allows) to be installed on a single row of the switchboard.
These escutcheons, which are used in combination, allow for only one type of cut-out on the front panel of the switchboard. In the case of ISFT100 devices, the escutcheons are not compatible with the comb busbars, in which case, the switchboard manufacturer must provide the required IP. ISFT100 devices are fitted with tabs (top and bottom) as standard, which makes it easy to achieve this IP. In the case of ISFT100N devices, the side profiles ensure that the IP is vertical across the door. The switchboard manufacturer must provide the horizontal IP.

PB104315-23.eps

Laterally attachable support profile.

62305a_1-11.eps

Insulated comb busbar cover for unused teeth.

62306a_4.eps

Escutcheon

62307a_1-88.eps

Terminal shields.

62310a_4.eps

Escutcheon

Insulation of live parts

Escutcheon

Clipped on the device, escutcheons ensure IP20 and IK07 degrees of protection.

Type	Escutcheon type			
ISFT100N	■	-	-	-
ISFT100	-	■	■	-
ISFT160	-	■	-	■
ISFT250	-	■	-	■
ISFT400	-	■	-	■
ISFT630	-	■	-	-

ISFT100N fusegear

DB120627.eps

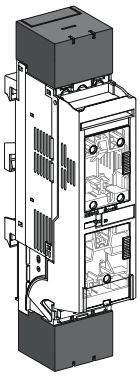

DB120628.eps

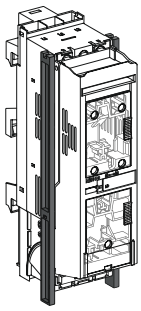

ISFT100 fusegear

DB120126.eps

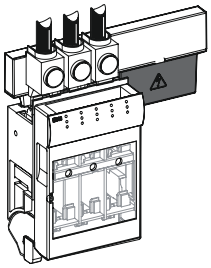

DB120127.eps

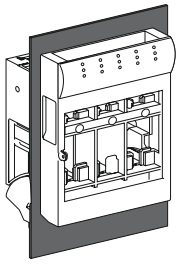

ISFT160 to ISFT630 fusegear

DB120128.eps

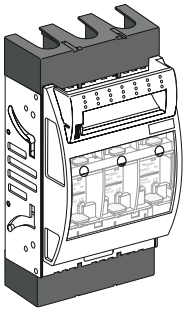

DB120131.eps

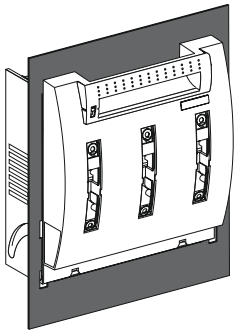

Fuse monitor
Fupact ISFT160 to ISFT630

PB111110.eps

ISFT160 fuse monitor.

PB111111.eps

ISFT400 equipped with a fuse monitor.

Functions
This device provides remote indication of the status of standard fuses (without strikers). It serves to:
■ signal a blown fuse
■ prevent the risks of abnormal voltages on the neutral.

Standards
■ Compliance with international standard IEC 60947-5-1.
■ Compliance with:
□ EN 50204
□ EN 61000 for electromagnetic compatibility (EMC).

Description
■ Characteristics:
□ operation with DIN fuses.
□ degree of protection: IP20.
■ May be used on capacitor bank circuits.
■ Simplified power supply:
□ does not require a specific power supply
□ operates with unbalanced phases
□ supplied via connection to the fuse terminals on the switch-disconnector fuses
□ operational voltage: 400…690 V AC, ±10 %, 50/60 Hz.
■ Tested for electromagnetic compatibility (EMC).
■ Mounting:
□ connected to the fuse-carrier assembly forming the cover.
■ The package consists of:
□ a fuse-carrier/handle and fuse monitor sub-assembly supplied as a kit composed of:
- fuse monitor equipped with one NO contact and one NC contact
- fuse-carrier with the handle
□ the customer must remove his fuse-carrier/handle assembly from his product and replace it with this kit.
■ Characteristics:
□ IP20 degree of protection
□ product with fuse monitor must be integrated inside switchboards and not in front face.

Operation
Reset
The device is automatically reset when the fuse-links are replaced.

Indications
■ Normal operation:
□ the green LED is ON when voltage is present at the fuse terminals
□ the contacts are in the rest position.
■ Operation when a fuse blows:
□ the green LED goes off and the red LED goes on
□ the contacts are actuated:
- the NO contact is for remote fault indication
- the NC contact may be used, for example, to control an undervoltage device in order to shut down equipment that may be sensitive to single-phasing.

Electrical characteristics

Power circuit					
Rated operational voltage		400 to 690 V AC 50/60 Hz ±10 %			
Power consumption		< 3 VA			
Rated frequency		50/60 Hz			
Measurement impedance		> 1000 Ω/V			
Rated impulse withstand voltage Uimp (1.2/50 µs)	Phase to phase	8 kV			
	Upstream / downstream	12 kV			
Auxiliary contact output terminals					
Terminals	NO	13 - 14			
	NC	21 - 22			
Wire size	Flexible	≤ 1.5 mm² Cu			
	Rigid	≤ 2.5 mm² Cu			
Output contact characteristics (1NO + 1NC)					
Conventional thermal current Ith (A)		5			
Rated insulation voltage (V)		250			
Minimum load		10 mA at 24 V			
Characteristics		**AC**		**DC**	
Utilisation category (IEC 60947-5-1)		**AC12**	**AC15**	**DC12**	**DC13**
Operational current (A)	24 V	-	5	-	5
	48 V	-	5	-	-
	110 V	-	5	-	-
	220/240 V	-	5	-	-
	250 V	-	5	-	-
	380/415 V	-	-	-	-
	440 V	-	-	-	-
	660/690 V	-	-	-	-
Rated operational voltage / max. breaking voltage (V AC)		250/440 V			
Rated breaking capacity (VA)		2000			
S (mm²) Cu		≤ 1.5			

General characteristics

Ambient operating temperature range (°C)	-25…+55 (≤ 500 V)	-25…+45 (≥ 500 V)
Transport and storage temperature range (°C)	-40…+70	
Fuse blowing detection time (s)	< 0.5	
Overvoltage category / pollution degree	IEC 60947-1 3	
Dielectric test voltage (between power circuit and output terminals)	5 kV rms / 1 min 50 Hz	
Electromagnetic compatibility - emission		
Conducted disturbances	EN 55022 Class B	
Radiated disturbances	EN 55022 Class B	
Electromagnetic compatibility - immunity		
Electrostatic discharge (ESD)	EN 61000-4-2 category B level 2/3	
Radiated field susceptibility (RF)	EN 61000-4-3 category A level 3	
Conducted low energy susceptibility (EFT)	EN 61000-4-4 category B level 2	
Surge immunity test	EN 61000-4-5 level 4	
Conducted high energy susceptibility (RF)	EN 61000-4-6 category A level 3	
Radio-frequency interference (GSM)	ENV 50204 category A	

Mechanical characteristics

Degree of protection	IP20
Weight (kg) / Rating	0.2

PB111112.eps

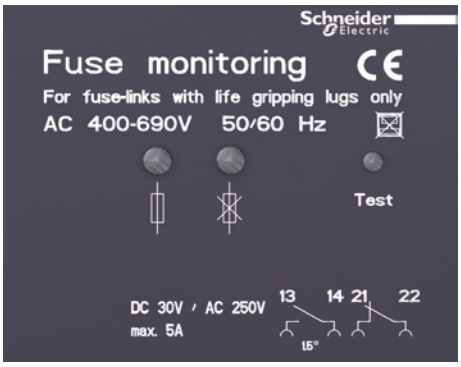

Functional table of contact status

	Blown-fuse contact	
	green led 13 — 14 21 — 22	red led 13 — 14 21 — 22

Blown-fuse indicator
Fupact ISFT160

Only the ISFT160 device integrates blown-fuse indication contacts in a separate add-on unit.

This system requires the use of striker fuse-links. It provides remote indication of the fuse status:
- it signals blown fuses
- it protects motors from overloads caused by single-phase operation
- it prevents the risk of abnormal voltages on the neutral
- it must be used with DIN 00 blade type fuse-links.

62328a_5-06.eps

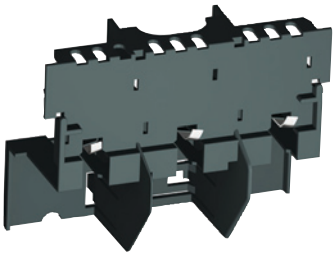

Blown-fuse indication contact unit.

Functional table of contact status

	Blown-fuse changeover contact	
	4 1 2	**Maximum number**
ISFT160	■	1 set of 3

Blown-fuse changeover contact					
Conventional thermal current Ith (A)		2			
Rated insulation voltage (V)		250			
Minimum load		100 mA at 24 V			
		AC		**DC**	
Load		AC12	AC15	DC12	DC13
Operational current (A)	24 V	2	-	0.2	-
	48 V	2	-	0.2	-
	110 V	2	-	0.2	-
	220/240 V	2	-	0.2	-

Blown-fuse indication contact unit position

DB120176.eps

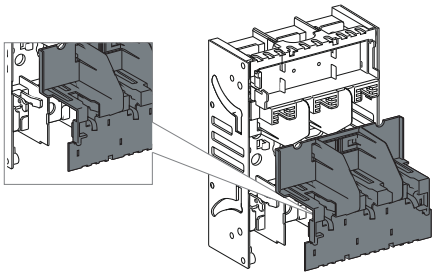

Fuse-link monitoring and testing

Fupact ISFT160 to ISFT630

62194A_SE.eps

ISFT160.

Monitoring

ISFT 160 to 630 fuse-switch disconnectors are equipped with large windows so that the fuse-link technical characteristics are clearly visible.

DB120173.eps

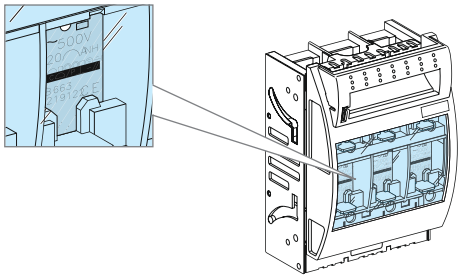

Testing

DB120174.eps

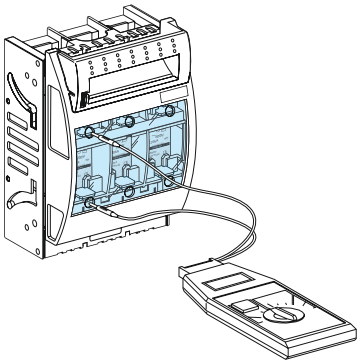

Sliding covers on the front panel provide access to the fuse-link status test points while maintaining the IP20 protection index.

Control, locking and operation
Fupact ISFT100N to ISFT630

The main moving contacts are controlled by the pivoting fuse-carrier assembly forming the cover for the ISFT devices
When in open position, the fuse-switch disconnector fuse-carrier assembly guarantees isolation with visible break.

62342a_5.eps

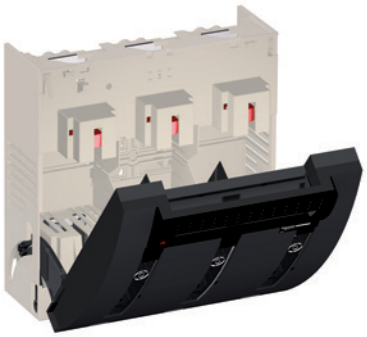

ISFT630.

Access to the fuse-links:
- may be protected by lead seals on the ISFT devices
- may be protected using lead seals on the ISFT devices.

To lock the fuse-switch disconnector in closed (ON) position, the fuse-carrier is equipped as standard with lead-seal.

Control

DB120137.eps

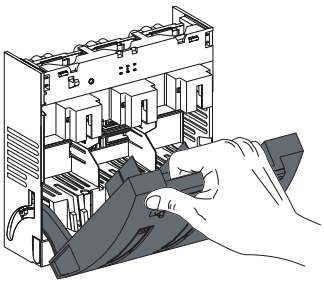

Locking

DB120139.eps

ON

DB120631.eps

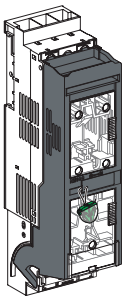

Lead-seal locking for the ISFT100N.

DB120141.eps

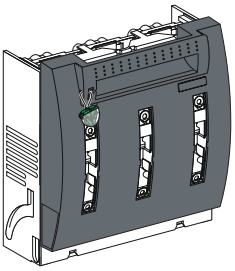

Lead-seal locking for the ISFT100 to ISFT630 devices.

Locking in open (OFF) position guarantees isolation as defined by IEC 60947-3.

Type	Function	Means	Accessory
ISFT100N ISFT100 ISFT160 ISFT250 to ISFT630	Device locking in closed (ON) position	Lead seal	Built-in

For ISF• fusegear devices, the fuse-carrier assembly is used both to control the device and house the fuse-link.

For fuse-switch disconnectors
■ ISFT100N: the pivoting fuse-carrier assembly accepts two fuse-links side by side and a third situated under the first two fuse-links.
■ ISFT100 to ISFT630: the pivoting fuse-carrier assembly accepts the three fuse-links side by side.

Fuse-carriers

Compatibility between ISF• fuse-switch disconnectors and fuse-links (NH)

DB120818.eps

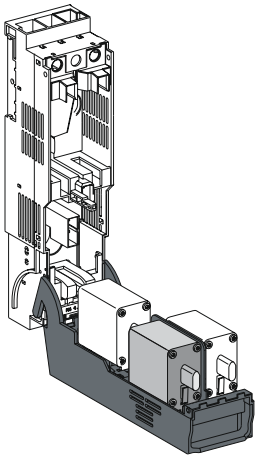

Pivoting fuse-carrier assembly for the ISFT100N.

DB120144.eps

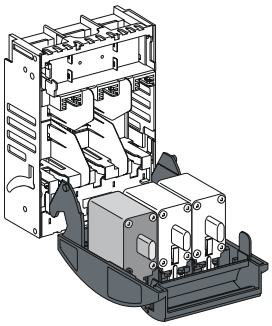

Pivoting fuse-carrier assembly for the ISFT100 to ISFT630 devices.

Type of DIN fuse-link	NH000	NH00	NH1	NH2	NH3
ISFT100N	■	-	-	-	-
ISFT100	■	-	-	-	-
ISFT160	■	■	-	-	-
ISFT250	-	-	■	-	-
ISFT400	-	-	-	■	-
ISFT630	-	-	-	-	■

Insertion and removal of fuse-links

Fuse-links are held in place by clips behind the front panel of the fuse-carriers, thus making removal possible without touching the fuse-links.

DB120147.eps

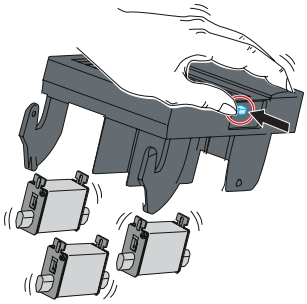

ISFT100 to ISFT630.

Auxiliary contacts and indications

Fupact ISFT100N to ISFT630

62325a_1-29.eps

62326a_3-74.eps

PB104316-20.eps

NO + NC auxiliary contacts.

The optional auxiliary contacts carry out indication functions.
They provide remote indication of the fuse-switch disconnector status. They may also be used to indicate and carry out automatic functions such as electrical interlocking.

Standards: compliance with international recommendation IEC60947-5-1.
Description: NC/NO changeover contact.

Functional table of contact status

	Auxiliary changeover contact	
	4 1 2	Maximum number
ISFT100N	■	1
ISFT100	■	2
ISFT160	■	2
ISFT250	■	2
ISFT400	■	2
ISFT630	■	2

Auxiliary changeover contact for ISFT100N					
Conventional thermal current Ith (A)		2			
Rated insulation voltage (V)		250			
Minimum load		100 mA at 24 V			
		AC		**DC**	
Load		AC12	AC15	DC12	DC13
Rated operational current (A)	24 V	6	-	3	-
	48 V	6	-	1	-
	110 V	6	-	0.5	-
	220/240 V	6	-	0.25	-

Auxiliary changeover contact for ISFT100 to 630					
Conventional thermal current Ith (A)		2			
Rated insulation voltage (V)		250			
Minimum load		100 mA at 24 V			
		AC		**DC**	
Load		AC12	AC15	DC12	DC13
Rated operational current (A)	24 V	2	-	0.2	-
	48 V	2	-	0.2	-
	110 V	2	-	0.2	-
	220/240 V	2	-	0.2	-

62325a_1-29.eps

Auxiliary contact for ISFT100/250/400/630.

62327a_4.eps

Auxiliary contact for ISFT160.

PB104316-20.eps

Auxiliary contact for ISFT100N.

Position of auxiliary contacts for ISFT devices

ISFT100N

DB120821.eps

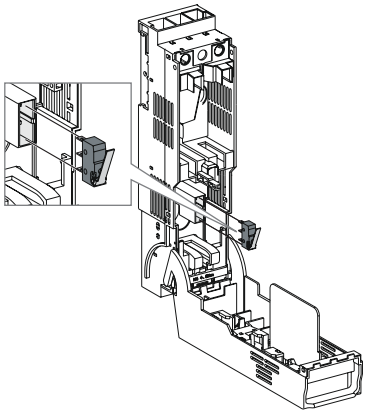

ISFT100

DB120150.eps

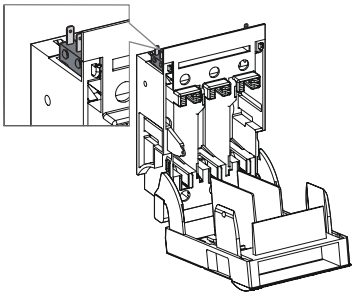

ISFT160

DB120151.eps

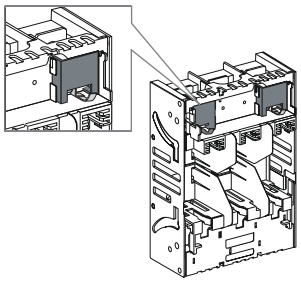

ISFT250

DB120152.eps

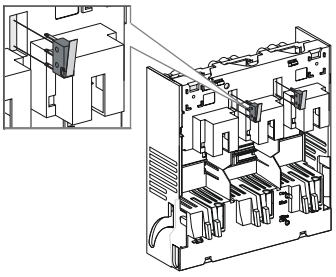

ISFT400/630

DB120153.eps

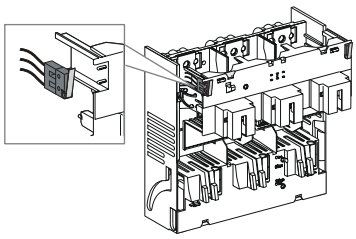

General characteristics: ISFL

Fupact ISFL160 - Installation

ISFL fusegear is installed vertically and connected directly to the busbars.
The connection is bolted or, for the ISFL160, can also use the hook-on connection.

_MG_1010_69_r.eps

ISFL160 (direct connection to the busbars).

ISFL160 fusegear

Connection to busbars.
The power circuit is connected:
- either directly to the 100 mm busbars for 3-pole version or to the 185 mm busbars for 1-pole version
- or using a hook-on connection to 60 mm busbars (3-pole version)
- or via a conversion kit for connection to 185 mm busbars (3-pole version)
- or via a conversion kit for two devices and for connection to 185 mm busbars.

Downstream connection of distribution circuits requires cables (3-pole version).

DB400989.eps

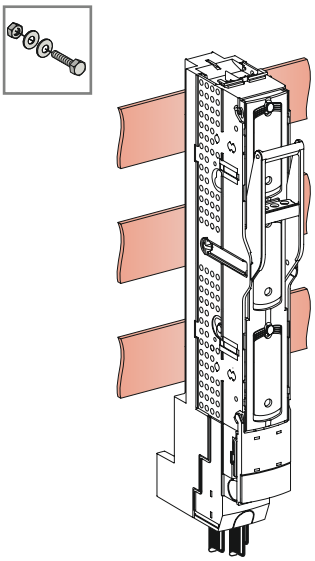

DB419171.eps

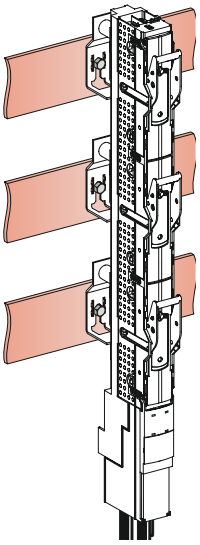

DB400990.eps

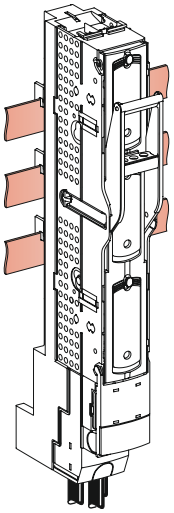

DB419172.eps

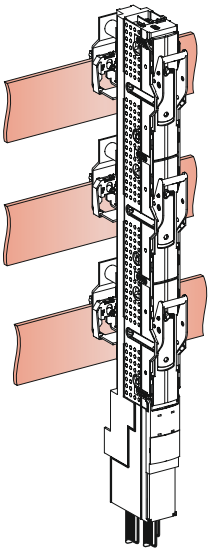

DB120098.eps

Direct connection to the busbars:
the device is bolted to the busbars with one connection point per phase that ensures both electrical connection and secure mechanical mounting.

DB120099.eps

Hook-on connection to busbars:
the device tightly hooks on to the busbars via three hooks that ensure both electrical connection and secure mechanical mounting.

These two systems ensure direct contact of the power circuit to the busbars and traditional connections for downstream distribution (bare cable connectors, lugs, bars, distribution connectors, etc.).

The two connection systems can also be reversed to supply distribution circuits via the upstream terminals.

ISFL250/400/630 fusegear

Connection to busbars.
The power circuit is connected:
- either directly to the 185 mm busbars for 1-pole and 3-pole version
- or using a hook-on connection to 185 busbars
- downstream connection of distribution circuits requires cables.

DB400991.eps

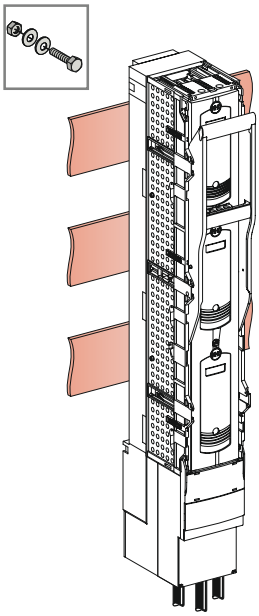

DB419058.eps

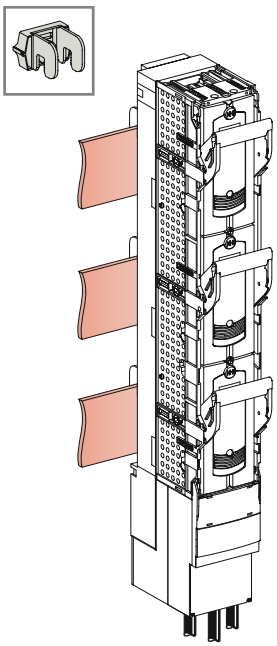

ISFL1250 fusegear

Connection to busbars.
The power circuit is connected:
- either directly to the 185 mm busbars for 3-pole version
- or using a hook-on connection to 185 mm busbars
- downstream connection of distribution circuits requires cables.

DB414214.eps

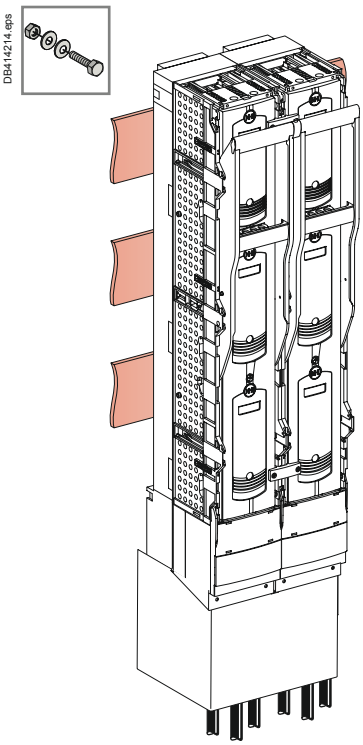

DB414215.eps

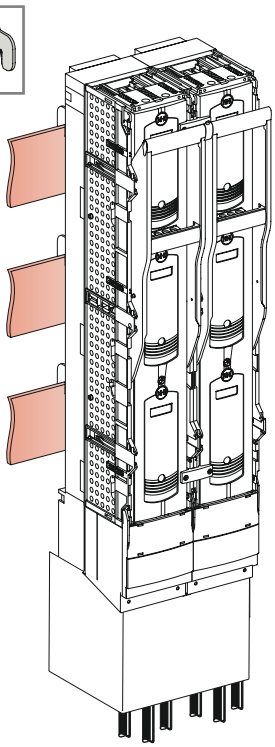

Fuse-switch disconnector selection

Fupact ISFL160 to ISFL1250

PB107274_11.eps

ISFL160 - 3P

PB113883-R8.eps

ISFL160 - 1P

PB107275_20.eps

ISFL250 - 3P

PB113884-R10.eps

ISFL250 - 1P

Fuse-switch disconnectors

Number of poles / type of fuse-link			IEC60 269-2-1	Section 1
Electrical characteristics as defined by IEC 60947-1 / IEC 60947-3 and EN 60947-1 / EN 60947-3				
Conventional thermal current (A)	In free air	**Ith**	at 40 °C	
	Maximum fuse power dissipation (W)			
	In enclosure	**Ithe**	at 40 °C	
	Maximum fuse power dissipation (W)			
Rated insulation voltage (V)		**Ui**	AC 50/60 Hz / DC	
Rated impulse withstand voltage (kV)		**Uimp**		
Rated operational voltage (V)		**Ue**	AC 50/60 Hz	
Rated operational voltage AC20 and DC20 (V)		**Ue**		
Rated operational current (A)		**Ie**	AC 50/60 Hz	
				220/240 V
				380/415 V
				440/480 V (1)
				500 V
				660/690 V
			DC/poles in series	
				125 V /nbr of poles
				220 V /nbr of poles
				440 V /nbr of poles
Rated duties		Uninterrupted duty		
Rated short-circuit breaking capacity (kA rms)/ Rated short-circuit making capacity (kA peak)/ Fuse-link In (A) (2)		**Icn/Icm/In**		415 V
				500 V
				690 V
Endurance (category B) (CO cycles)			Mechanical	
			Electrical AC	AC23B 415 V
				AC22B 500 V
				AC21B 690 V
Suitability for isolation				
Positive contact indication				
Pollution degree				
Control				
Direct handle (operator-dependent opening and closing)				
Locking	Padlocks			
	Lead seal			
Indication auxiliaries				
Auxiliary contacts				
Current transformer				
Installation and connection accessories				
Possible mounting position	Horizontal			
	Vertical			
Connector	For bare Cu/Al cables			
	For flexible bars			
Lugs for Cu/Al cables				
Terminal shields				
Dimensions and weight				
Overall dimensions H x W x D (mm)		3P		
Approximate weight without fuse-links (kg)		3P		

(1) Suitable for 480 V NEMA.
(2) Fuse-switch disconnectors with fuse-links.
(3) Only for ISF160 with direct connection to the busbars.
(4) AC22B 690 V.

	ISFL160		ISFL250			ISFL400			ISFL630			ISFL1250		
	3x1P or 3P/DIN (NH)		3x1P or 3P/DIN (NH)			3x1P or 3P/DIN (NH)			3x1P or 3P/DIN (NH)			3P/DIN (NH)		
	160		250			400			630			1250		
	12		23			34			48			2 x 48		
	160		250			400			630			1250		
	12		23			34			48			2 x 48		
	1000		1000			1000			1000			1000		
	8		12			12			12			12		
	690		690			690			690			690		
	800		800			800			800			800		
	AC22B	**AC23B**	**AC21B**	**AC22B**	**AC23B**	**AC21B**	**AC22B**	**AC23B**	**AC21B**	**AC22B**	**AC23B**	**AC21B**	**AC22B**	**AC23B**
	160	160	250	250	250	400	400	400	630	630	630	1250	1250	-
	160	160	250	250	250	400	400	400	630	630	630	1250	1250	-
	160	-	250	250	-	400	400	-	630	630	-	1250	1250	-
	160	-	250	250	-	400	400	-	630	630	-	1250	1250	-
	100	-	250	-	-	400	-	-	630	-	-	1250	-	-
	DC21B	**DC22B**	**DC21B**	**DC22B**		**DC21B**	**DC22B**		**DC21B**	**DC22B**		**DC21B**	**DC22B**	
	-	-	-	-		-	-		-	-		-	-	
	-	-	-	-		-	-		-	-		-	-	
	-	-	-	-		-	-		-	-		-	-	
	■		■			■			■			■		
	100 / 210 / 160		120 / 250 / 250			120 / 250 / 400			120 / 250 / 630			120 / 250 / 630		
	100 / 210 / 160		120 / 250 / 250			120 / 250 / 400			120 / 250 / 630			120 / 250 / 630		
	100 / 210 / 160		100 / 210 / 200			100 / 210 / 315			100 / 210 / 500			100 / 210 / 500		
	1400		1400			800			800			800		
	200		200			200			200			200		
	200 (4)		200			200			200			200		
	200		200			200			200			200		
	■		■			■			■			■		
	■		■			■			■			■		
	3		3			3			3			3		
	■		■			■			■			■		
	■		■			■			■			■		
	-		-			-			-			-		
	■		■			■			■			■		
	■ (3)		■			■			■			■		
	■		-			-			-			-		
	■		■			■			■			■		
	■		■			■			■			■		
	■		-			-			-			-		
	■		-			-			-			-		
	included		included			included			included			included		
	405 x 50 x 123		741 x 100 x 190			741 x 100 x 190			741 x 100 x 190			834 x 200 x 190		
	1.30		4.70			5.00			5.60			15.20		

Fuse-switch disconnector selection

Fupact ISFL160 to ISFL1250

PB107274_11.eps

ISFL160 - 3P

PB113883-R8.eps

ISFL160 - 1P

PB107275_20.eps

ISFL250 - 3P

PB113884-R10.eps

ISFL250 - 1P

Fuse-switch disconnectors		
Type of fuse-link		
	DIN NH000	
	DIN NH00	
	DIN NH1	
	DIN NH2	
	DIN NH3	
Installation and connection		
ISFL160 for 60 mm busbar hook-on contact mounting with multiple use terminal (screw M8)		
ISFL160 for 60 mm busbar hook-on contact mounting with box terminal 95 mm^2		
ISFL160 for 100 mm busbar hook-on contact mounting with multiple use terminal (screw M8)		
ISFL160 for 100 mm busbar hook-on contact mounting with box terminal 95 mm^2		
Conversion kit for 185 mm busbar direct contact mounting (for 1 or 2 x ISFL160)		
ISFL160 for 185 mm busbar 1-pole switchable direct mounting		
ISFL160 for 185 mm busbar 1-pole switchable hook-on mounting		
Terminal tightening torque (Nm)		
Temperature derating (with gG fuse-link) (1)		
"Vertical mounting" fuse-links in vertical position	**Ith** (A)	40 °C
		45 °C
		50 °C
		55 °C
		60 °C
		65 °C
		70 °C
"Horizontal mounting" fuse-links in horizontal position	**Ith** (A)	40 °C
		45 °C
		50 °C
		55 °C
		60 °C
		65 °C
		70 °C

(1) Derating data is based on:
- the maximum rating for fuse-links intended for the device
- maximum power dissipation.

	ISFL160	ISFL250	ISFL400	ISFL630	ISFL1250
	■	-	-	-	-
	■	-	-	-	-
	-	■	-	-	-
	-	-	■	-	-
	-	-	-	■	■
	■	-	-	-	-
	■	-	-	-	-
	■	-	-	-	-
	■	-	-	-	-
	■	-	-	-	-
		■	■	■	■
		■	■	■	■
	see page B-4				
	160	250	400	630	1250
	150	240	380	600	1200
	145	225	360	570	1130
	135	215	340	535	1070
	130	200	320	500	1000
	120	190	300	475	940
	110	175	280	440	880
	160	-	-	-	-
	150	-	-	-	-
	145	-	-	-	-
	135	-	-	-	-
	130	-	-	-	-
	120	-	-	-	-
	110	-	-	-	-

Accessories and auxiliaries

Fupact ISFL160 - 3P

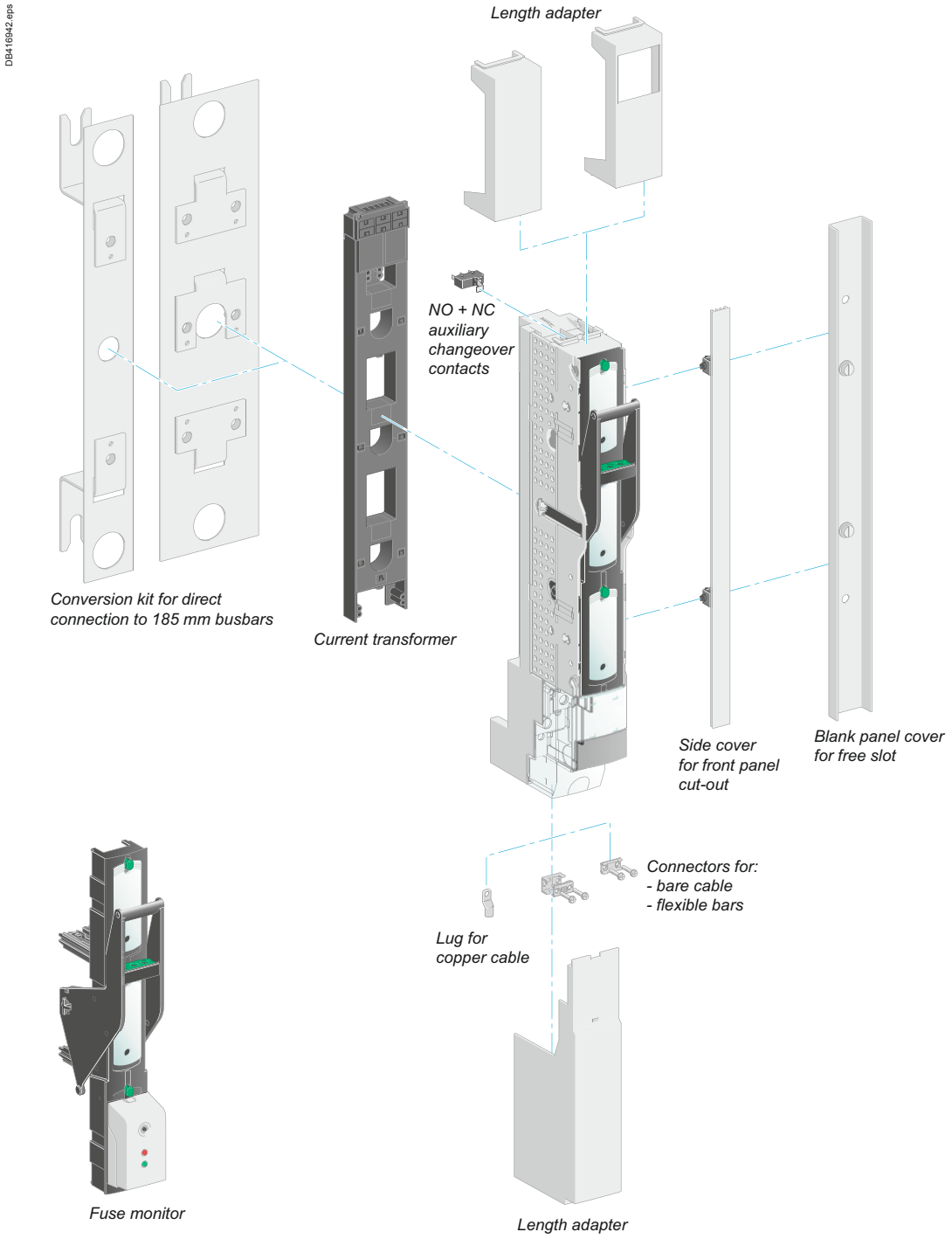

Fupact ISFL160 - 1P

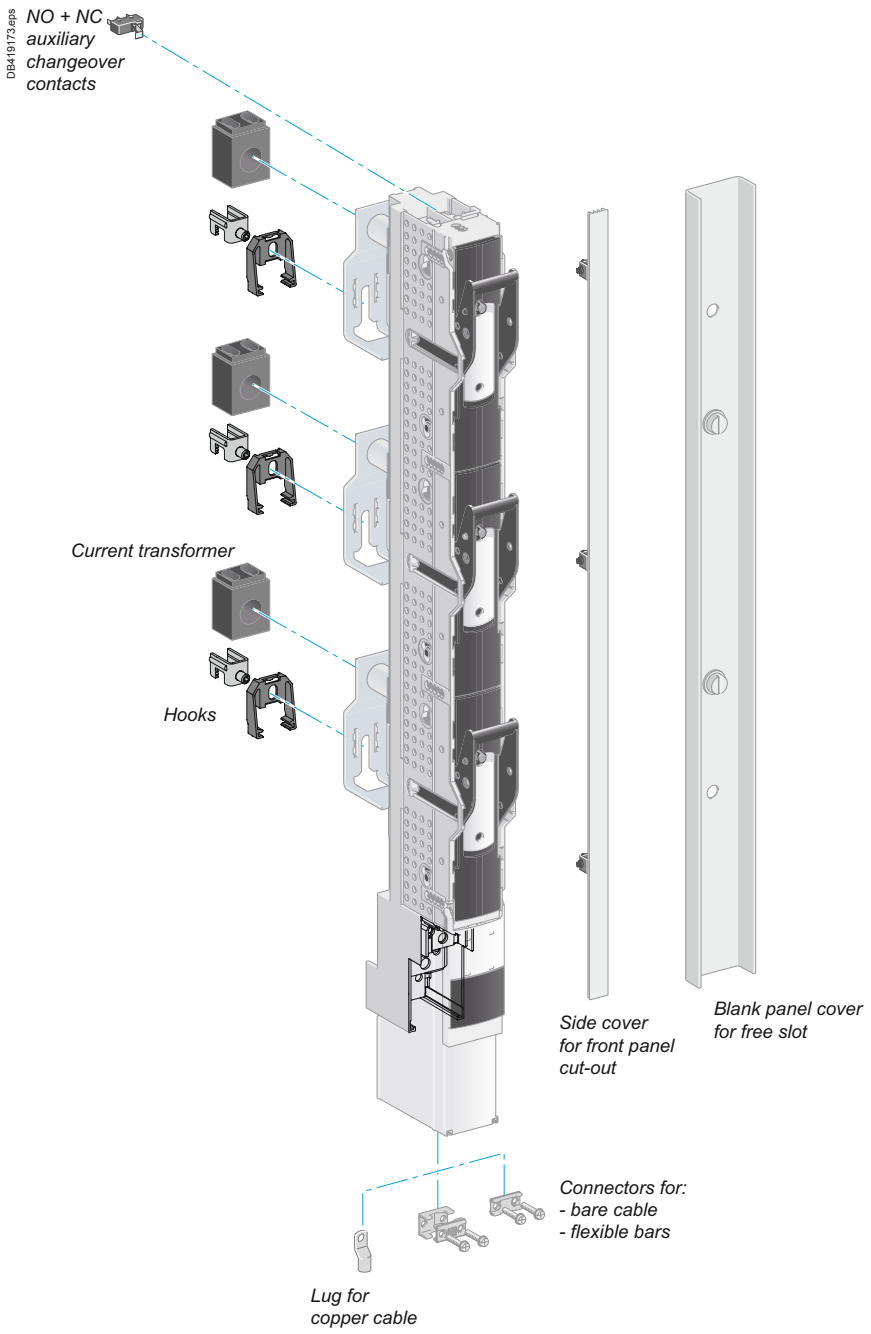

Accessories and auxiliaries

Fupact ISFL250 to ISFL630

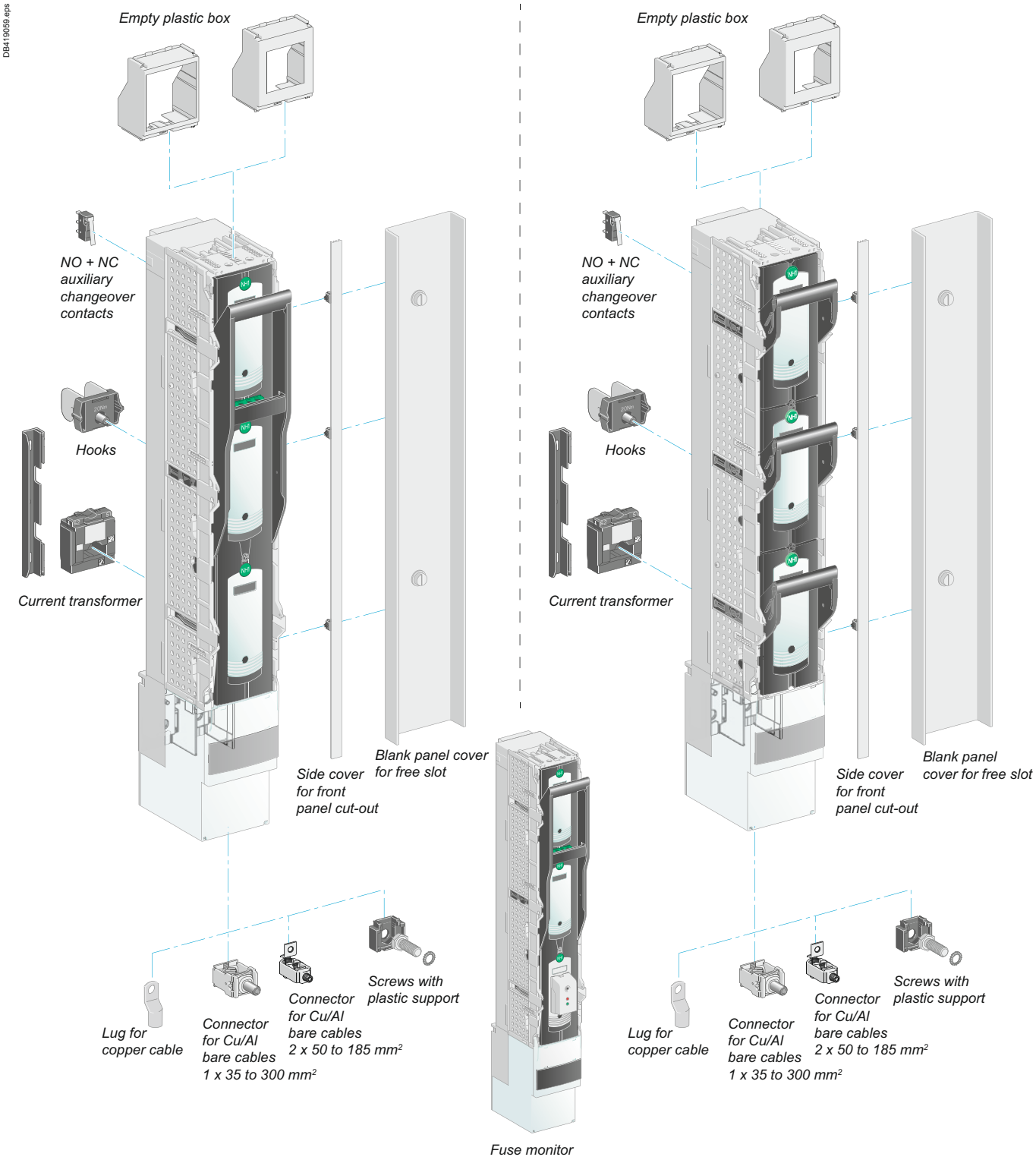

Fupact ISFL1250

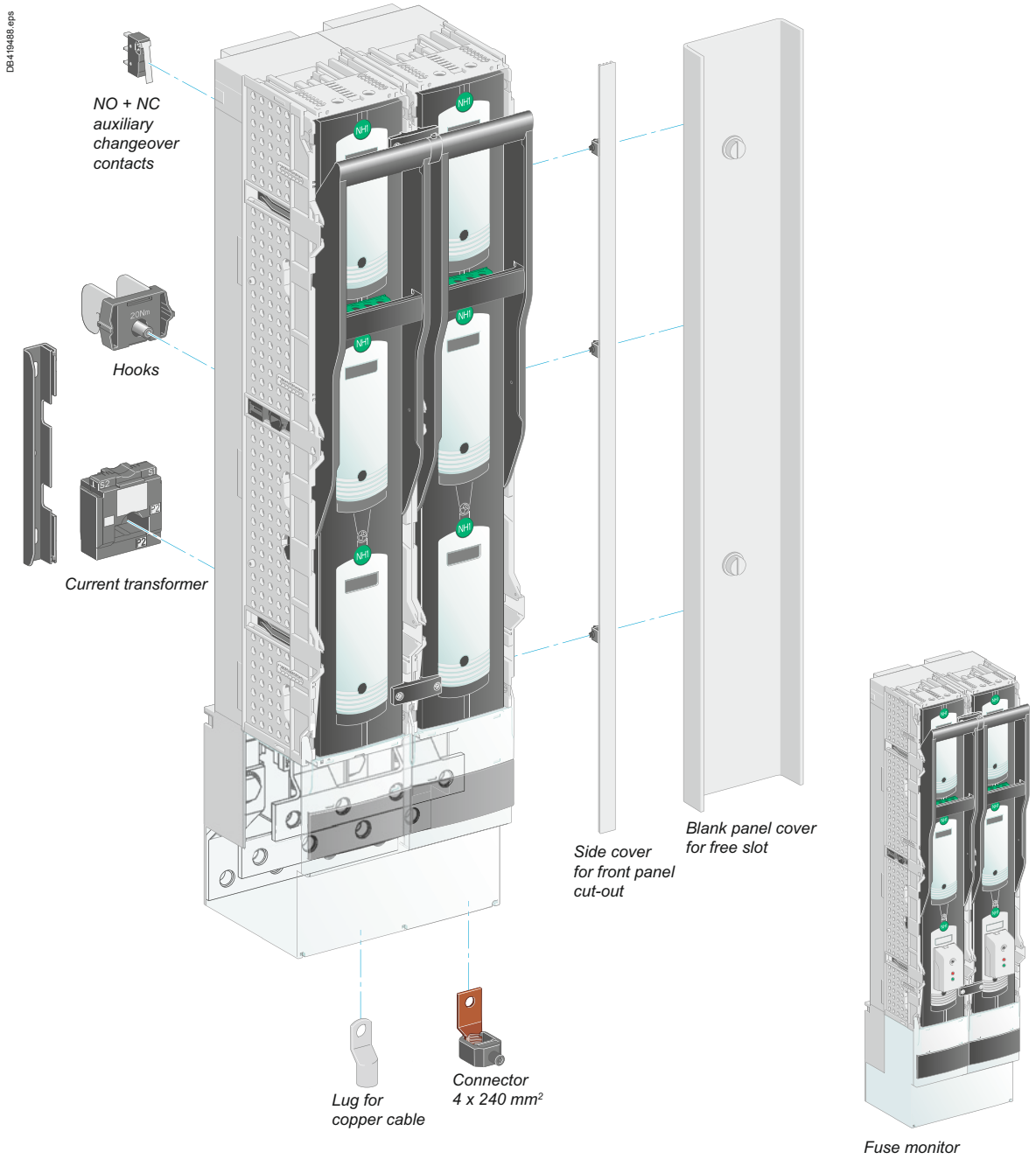

Connection and accessories

Fupact ISFL160 to ISFL1250 - Connection

Fupact fuse-switch disconnectors can supply distribution circuits via either the upstream or downstream terminals.

Devices intended for connection to busbars are configured as standard for distribution via the downstream terminals.

ISFL fusegear is equipped as standard with connectors or terminals for front connection of:
- cables with lugs for the ISFL160 and ISFL1250 devices
- flexible bars for the ISFL160 devices
- bare cables for ISFL160 to 630 devices.

	ISFL160	ISFL250	ISFL400	ISFL630	ISFL1250
Cables					
Lug (as standard)	95 mm²	-	-	-	
Cable connector to terminal	1.5 to 95 mm²	1 x 35 to 300 mm²			-
	-	2 x 50 to 185 mm²			
Flexible bars					
Connector	12 x 6 mm	-	-	-	-

DB120162.eps

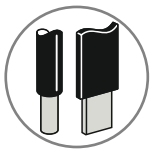

62330a_1-2_15.eps

Lug for copper cables.

62323a_3.eps

Connector for bare Cu/Al cables.

62324a_3.eps

Connector for flexible bars.

ISFL160 fusegear (1)

DB400993.eps

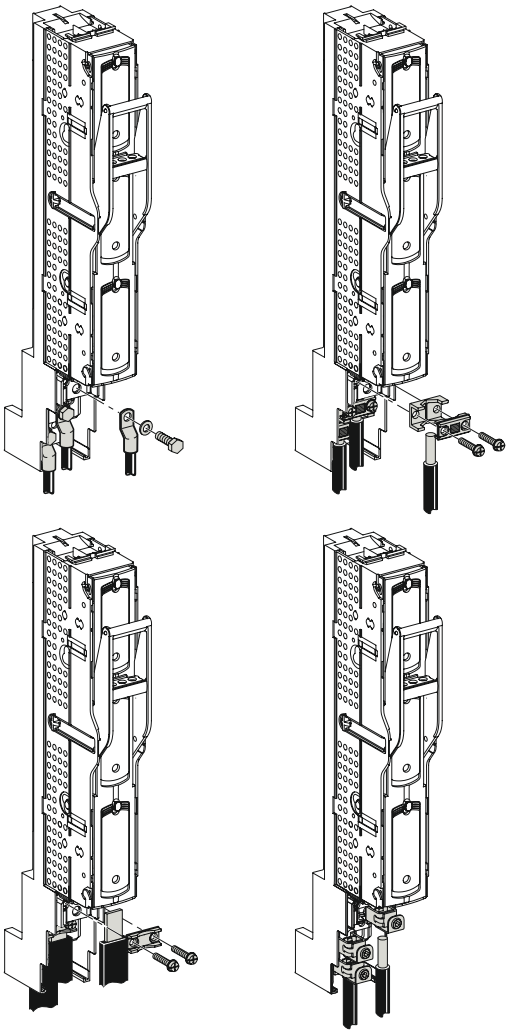

(1) Connections and accessories are identical for ISFL single phase.

62330a_1-2_15.eps

DB402725.eps

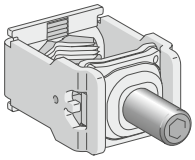

connector for Cu/Al bare cable 1 x 35 to 300 mm².

PB101086-22.eps

connector for Cu/Al bare cable 2 x 50 to 185 mm².

DB402726.eps

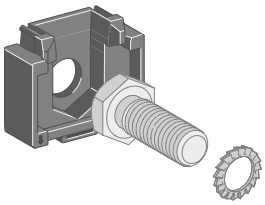

connector for cables with lugs.

DB419290.eps

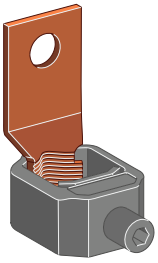

connector 4 x 240 mm².

ISFL250/400/630 fusegear (1)

DB400994.eps

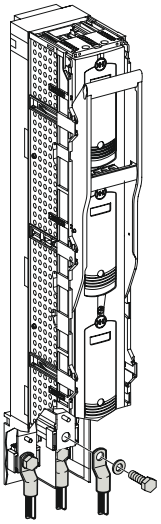

DB400995.eps

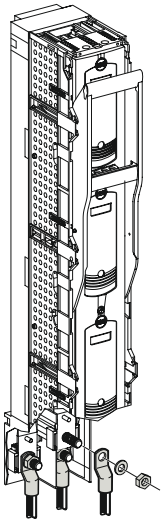

DB416945.eps

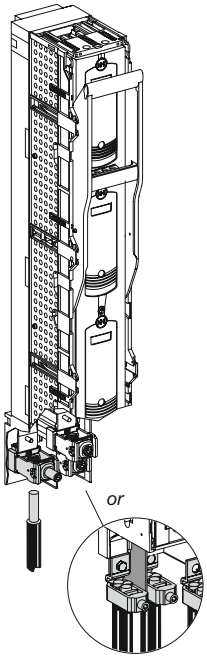

ISFL1250 fusegear

DB414216.eps

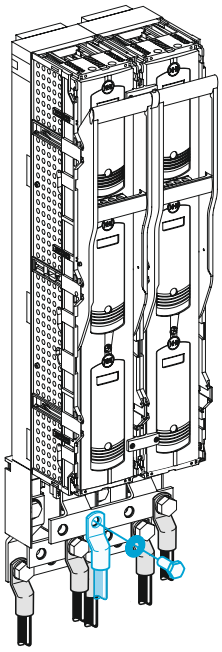

DB419291.eps

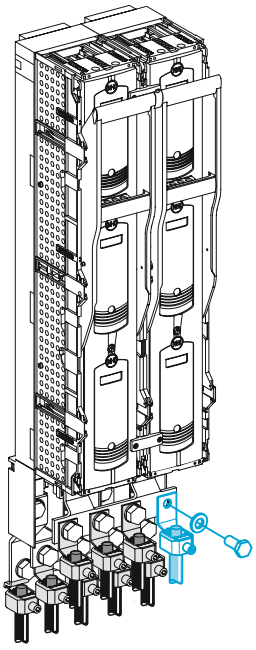

(1) Connections and accessories are identical for ISFL single phase.

Connection and accessories

Fupact ISFL160 to ISFL630 - Connection, coupling

ISFL160 1P

Direct connection to 185 mm busbars

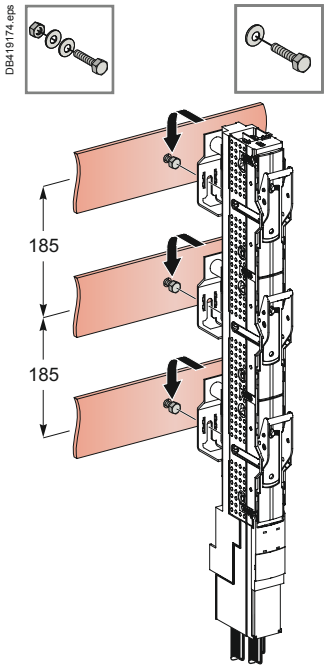

Two conversion kits are available for ISFL160 3-pole switchable to adapt the 100 mm standard fixing centres 185 mm fixing centres.

Conversion from 100 to 185 mm

The kit connects to the busbars via hook-on connection.
Conversion kit for 185 mm busbars:
■ both electrical and mechanical connection to the busbars is ensured by a set of nuts and bolts.
Electrical and mechanical connection of the device to 100/185 mm conversion kit is ensured by three screws.

ISFL160 (185 mm kit).

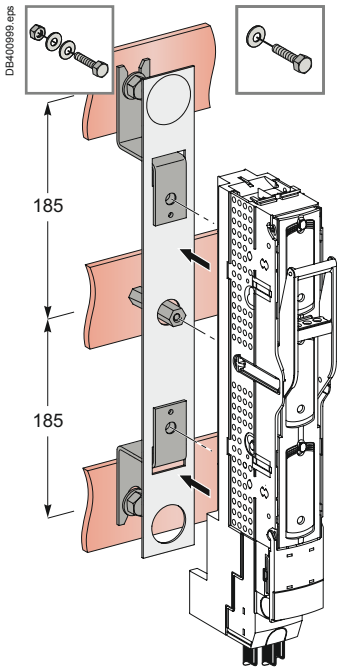

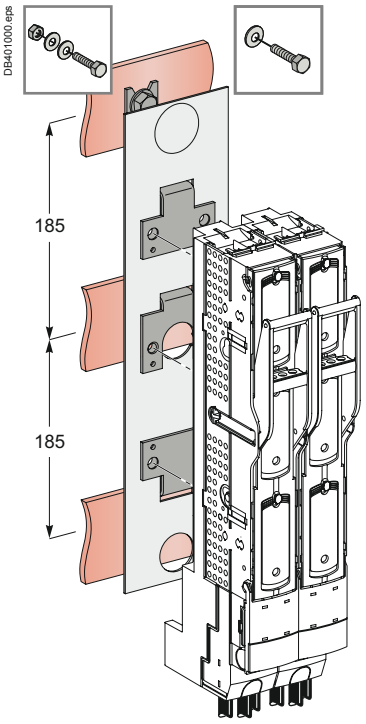

Installation of devices with different ratings on a given set of busbars

DB401001.eps

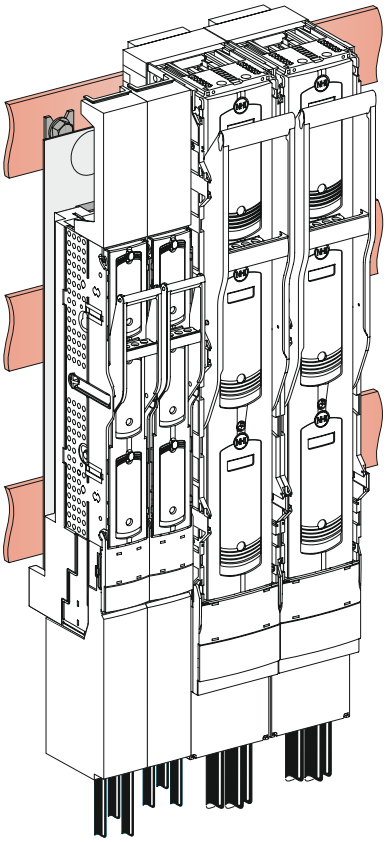

DB419489.eps

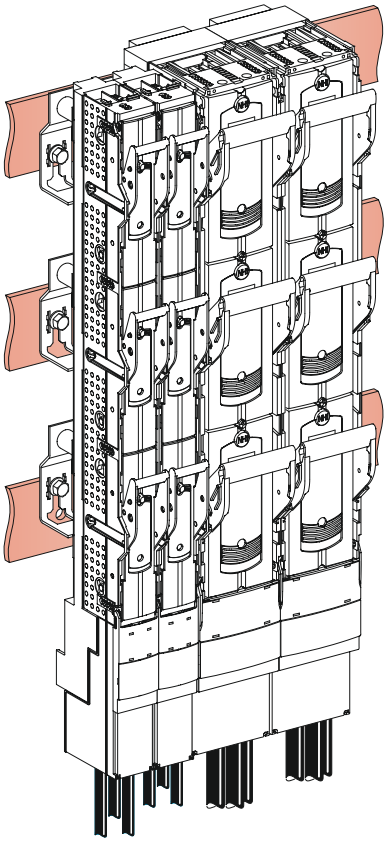

Connection and accessories

Fupact ISFL160 to ISFL630 - Reverse distribution

_MG_1010_69_r.eps

ISFL250 (direct connection on 185 mm² busbar).

ISFL160 fusegear devices with hook-on connection to 60 mm bars are available in two versions:
- connection via M8 screws
- connection via a 95 mm² terminal.

For each of these versions, the distribution reversal mode is achieved by rotating the hooks located at the rear, which gives the possibility of distribution from upstream. The fuse-carrier assembly does not change position. All the various connection modes remain possible (direct, mounting plates, etc.).

ISFL160 fusegear(1)

DB400997.eps

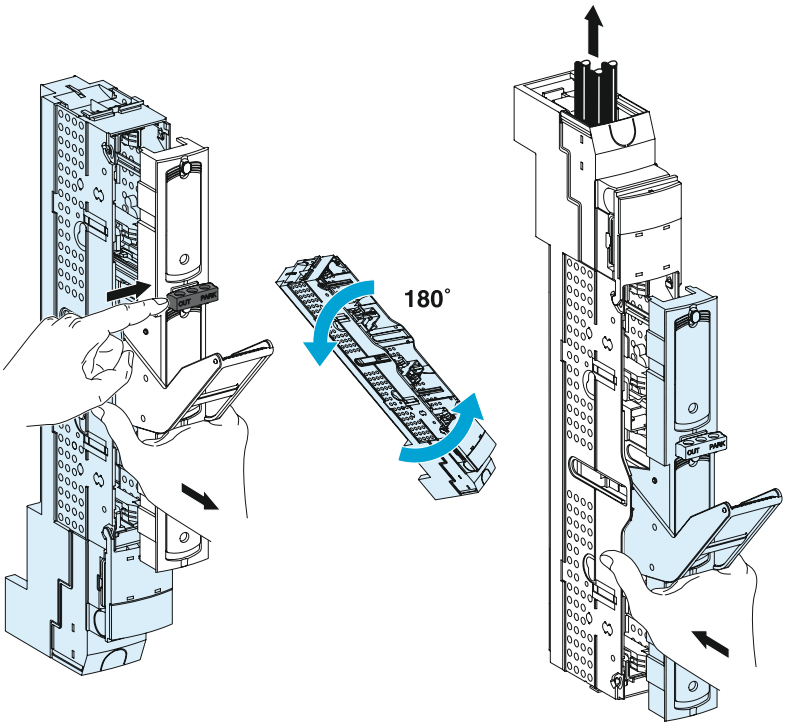

ISFL250/400/630 fusegear(1)

Release tab for the ISFL160: with the device in open position, press the release tab :
- down, to remove the fuse-carrier assembly from the base
- up, lock the device in open (OFF) position.

Release tab for the ISFL250/400/630: with the device in open position, press the release tab :
- to remove the fuse-carrier assembly from the base or install it on t(he base
- up, lock the device in open (OFF) position.

DB400998.eps

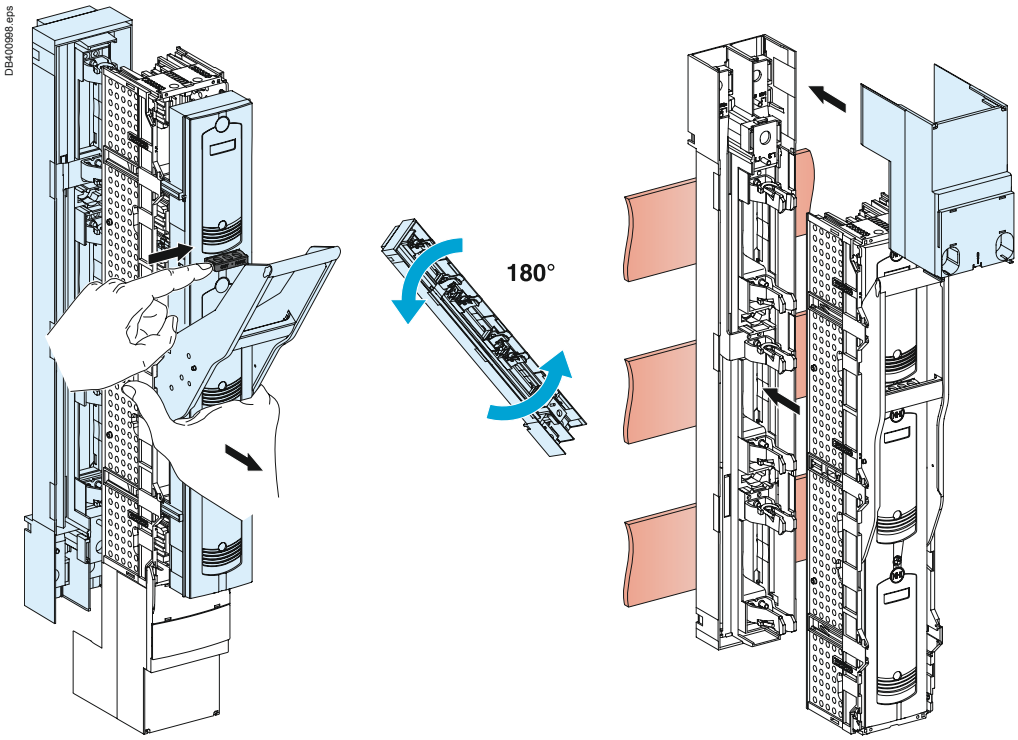

(1) For ISFL 1-pole: identical reverse distribution.

Fupact ISFL1250 - Reverse distribution

ISFL1250 fusegear devices can be reverse to have the possibility of distribution from upstream.

ISFL1250 fusegear

DB414217.eps

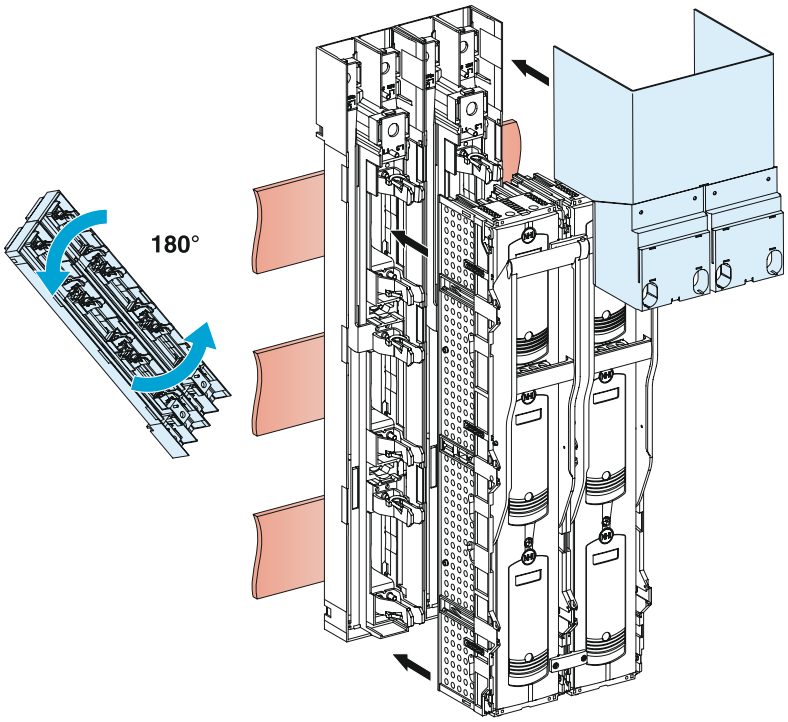

Insulation

Fupact ISFL160 to ISFL630

PB107288_24.eps

Length adapter.

PB107286_10.eps

Sideframe door cut out.

PB107287_18.eps

Sidewise angle bracket for side frame.

ISFL160 fusegear

DB401012.eps

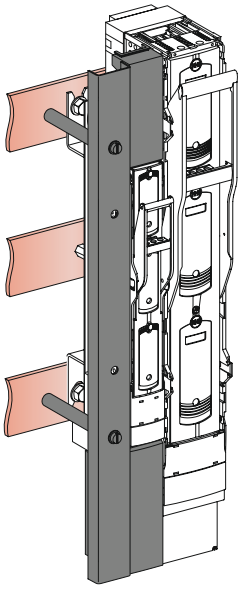

DB401011.eps

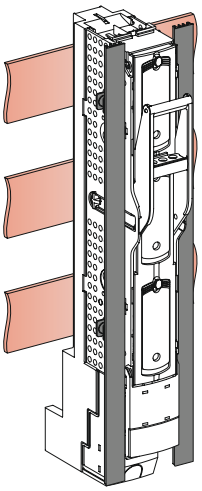

DB419176.eps

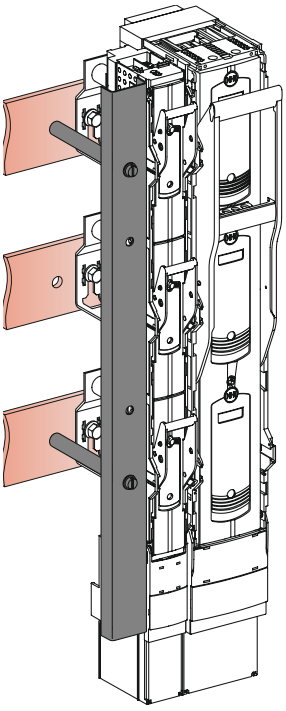

DB419175.eps

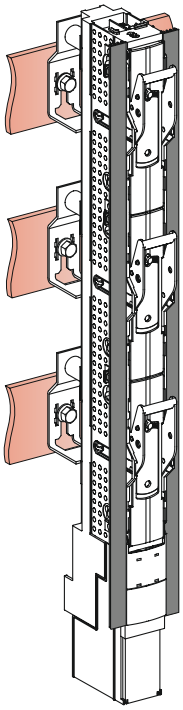

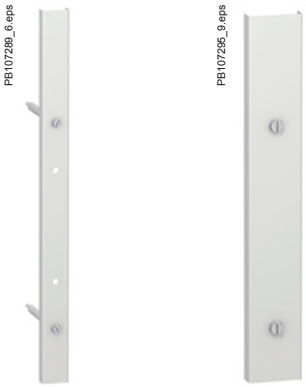

Blanck panel cover.

ISFL250/400/630 fusegear (1)

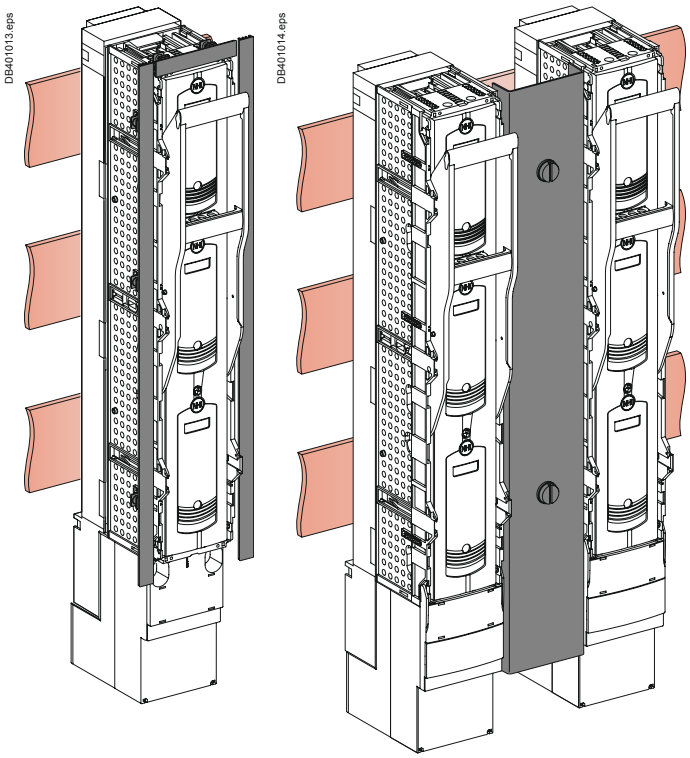

(1) Accessories are identical for ISFL 1-pole switchable.

ISFL1250 fusegear

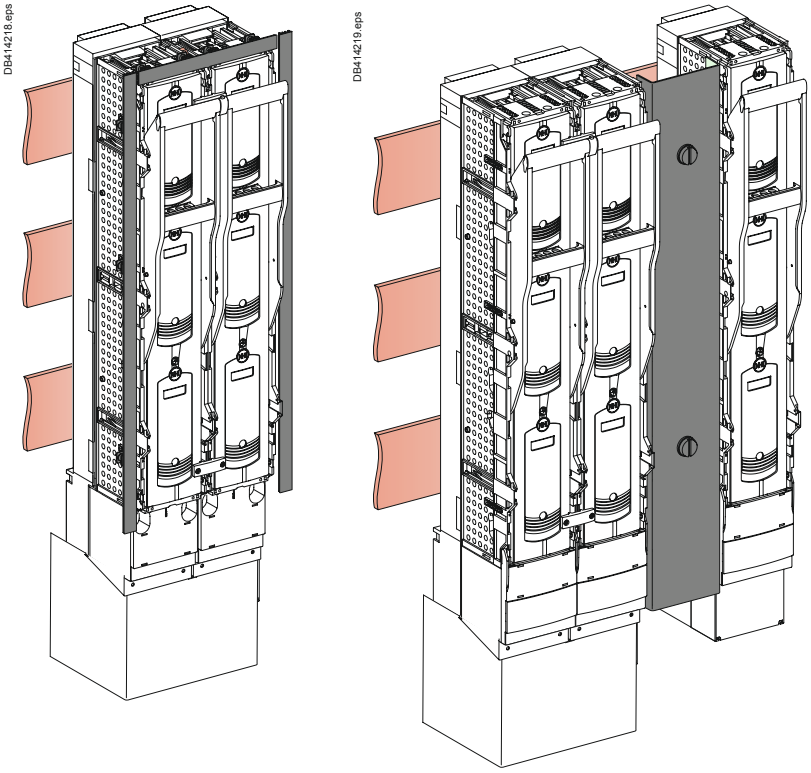

Fuse monitor
Fupact ISFL160 to ISFL1250

PB107276_11.eps

PB107276_20.eps

PB112072_L29.eps

Functions
The device provides remote indication of the standard fuse status (without strikers).
It is used to:
- signal a blown fuse
- protect motors from overloads caused by single-phase operation.

Standards
- Compliance with international standard IEC 60947-5-1.
- Compliance with:
  - EN 50204
  - EN 61000 for electromagnetic compatibility (EMC).

Description
- Fuse monitor function only for 3P.
- Operation with DIN fuses.
- May be used on capacitor bank circuits.
- Simplified power supply:
  - does not require a specific power supply
  - operates with unbalanced phases
  - supplied via connection to the fuse terminals on the switch-disconnector fuse
  - operational voltage 400...690 V AC, ±10 %, 50/60 Hz.
- Tested for electromagnetic compatibility (EMC).
- ISFL160:
  - it is a fuse-carrier/handle and fuse monitor sub-assembly supplied as a kit composed of:
    - fuse monitor equipped with one NO contact and one NC contact
    - fuse-carrier with the handle
  - the customer must remove his fuse-carrier/handle assembly from his product and replace it with this kit.
- ISFL250 to 1250:
  - in this case, customer needs to order directly fuse monitor mounted on a product
- Characteristics:
  - IP20 degree of protection
  - product with fuse monitor must be integrated inside switchboards and not in front face.

Note: *lugs for connection to the fuse-carrier are not supplied.*

Operation
Reset
The device is automatically reset when the fuse-links are replaced.

Indications
- Normal operation:
  - the green LED is ON when voltage is present at the fuse terminals
  - the contacts are in the rest position
- Operation when a fuse is blowed:
  - the green LED goes off and the red LED goes on
  - the contacts are actuated:
    - the NO contact is for remote fault indication
    - the NC contact may be used, for example, to control an undervoltage device in order to shut down equipment that may be sensitive to single-phasing.

Electrical characteristics

Power circuit					
Rated operational voltage		400 to 690 V AC 50/60 Hz ±10 %			
Consumption		< 3 VA			
Rated frequency		50/60 Hz			
Measurement impedance		> 1000 Ω/V			
Rated impulse withstand voltage (1.2 / 50 µs)	Phase / phase	8 kV			
	Upstream / downstream	12 kV			
Auxiliary contact output terminals					
Terminal indications	NO	13 - 14			
	NC	21 - 22			
Cable capacity	Flexible	≤ 1.5 mm² Cu			
	Rigid	≤ 2.5 mm² Cu			
Output contact characteristics (1NO + 1NC)					
Conventional thermal current Ith (A)		5			
Rated insulation voltage (V)		250			
Minimum load		10 mA at 24 V			
Characteristics		**AC**		**DC**	
Utilisation category (IEC 60947-5-1)		**AC12**	**AC15**	**DC12**	**DC13**
Operational current (A)	24 V	-	3	-	2
	48 V	-	3	-	-
	110 V	-	3	-	-
	220/240 V	-	3	-	-
	250 V	-	3	-	-
	380/415 V	-	-	-	-
	440 V	-	-	-	-
	660/690 V	-	-	-	-
Rated operational voltage / max. breaking voltage (V AC)		250/440			
Breaking capacity (VA)		2000			

General characteristics

Operating temperature range (°C)	-25…+55 (≤ 500 V)	-25…+45 (> 500 V)
Storage and transport temperature range (°C)	-40…+70	
Fuse blowing detection time (s)	< 2	
Overvoltage category / degree of pollution	IEC 60947-1 3	
Dielectric test voltage (between power circuit and output terminals)	5 kV rms / 1 min 50 Hz	
Electromagnetic compatibility - emission		
Conducted	EN 55022 Class B	
Radiated	EN 55022 Class B	
Harmonic currents	EN 61000-3-2 Class A	
Electromagnetic compatibility - immunity		
Electrostatic discharge (ESD)	EN 61000-4-2 category B level 2/3	
Radiated field susceptibility (RF)	EN 61000-4-3 category A level 3	
Surge immunity test	EN 61000-4-5 level 4	
Conducted low energy susceptibility (EFT)	EN 61000-4-4 category B level 3	
Conducted high energy susceptibility (RF)	EN 61000-4-6 category A level 3	
Radio-frequency interference (GSM)	ENV 50204 category A	
Magnetic field immunity		
Continuous	EN 61000-4-8 level 5	

Mechanical characteristics

Degree of protection	IP20
Weight (fuse monitor alone) (kg)	0.2

Dimensions

DB401946.eps

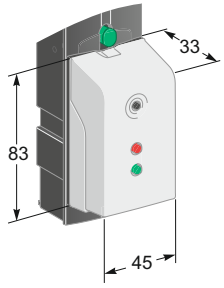

Measurement accessory
Fupact ISFL160 to ISFL1250

The current transformers (CTs) produce a current (1 - 5 A) on the secondary winding that is proportional to the current measured on the primary winding. They can therefore be used in conjunction with measurement devices (ammeters, energy meters), load-shedding devices, control relays, etc.

PB107279_15.eps

Single block current transformer for ISFL160 (1 or 3)

PB113887-R5.eps

Curent transformer for ISFL160 (1-pole version)

PB107281_18.eps

Current transformer for ISFL250/400/630/1250

Operation and implementation

ISFL160 to 1250 fusegear can be equipped with tube-unit current transformers (CT). The CT modules are available in two versions:
- ■ 3-pole module with one or three CTs for ISFL160 fusegear (3-pole version):
  - □ 1 ratings 150 A
- ■ Single-pole module with one CT for ISFL160 (1-pole version) /250/400/630/1250 fusegear:
  - □ 4 ratings from 150 to 600 A
- ■ the CT modules clip onto the back of the fusegear
- ■ connections are made:
  - □ via terminal blocks for the 3-pole modules (ISFL160) with output current of 1 A
  - □ via cables directly connected with output current of 5 A.
  - □ via lugs for the single-pole modules (ISFL250/400/630/1250).

Selection table

ISFL160 class 1 1-pole version			ISFL100 class 1 3-pole version
Ip/5	**Ip/1**	**Power (VA)**	
150/5	-	5	

Environment

- ■ Compliance with standards: IEC 60044-1, NFC 42502, VDE 0414, BS 7626 and IEC 60038-1.
- ■ Degree of protection: IP20.
- ■ Operating temperature range: -25 °C to +70 °C, relative humidity 95 %.
- ■ Storage temperature range: -40 °C to +80 °C.

Technical characteristics

CT electrical characteristics:
- ■ maximum operational voltage: 800 V
- ■ secondary current: 5 A and 1 A
- ■ frequency: 50 to 60 Hz
- ■ continuous overload current: 1.2 In
- ■ safety factor: Fs ≤ 5.

Transformation ratio:
- ■ Ip/5 A.

Select the ratio just above the measured current (In).
Example: In = 550 A → select a ratio of 600/5.

Selection table

ISFL160 accuracy class 1 3-pole version			ISFL250 to 1250 class 1	
Ip/5	**Ip/1**	**Power (VA) 1**	**Ip/5**	**Power (VA) 1**
150/5	-	1.5	150/5	2.5
			250/5	5
	150/1	2.5	400/5	5
			600/5	5

CT accuracy class:
- ■ the accuracy class depends on the transformer rating and the consumption of the measurement system. Consumption must take into account the devices and cables
- ■ for a given accuracy class, measurement system consumption must not exceed the transformer rating.

Caution:
- ■ never open the secondary circuit of a current transformer when the primary winding is energised
- ■ before any work on the secondary circuit, the terminals of the transformer secondary must be short-circuited.

PB107336_13.eps

ISFL250/400/630 (with CT).

PB107335_13.eps

ISFL160 (with CT).

PB112100-B_26.eps

ISFL250 (with CT).

CT accuracy class:

Measurement system

Schneider Electric device	Consumption in VA
72 x 72 mm ammeter	1.1
Analogue ammeter	1.1
Digital IM ammeter	0.5
Digital ammeter	0.3
PM/CM Power Meter	0.15
PM9	0.55

Primary copper cross-section in mm²	Rating in VA per meter of double wire at 20 °C
1	1
1.5	0.685
2.5	0.41
4	0.254
6	0.169
10	0.0975

For each ten-degree increase in temperature, the power drawn by the cables increases by 4 %.

Example of measurement system consumption at 40 °C:

4 m of 2.5 mm² double wire	1.7 VA
PM	+ 0.15 VA
Total consumption	= 1.85 VA

The accuracy class of the CT is determined:

- ■ using the selection table
- ■ by the fact that consumption must be < the transformer rating:
  - □ class 1 for a CT with a ratio of 150/5
  - □ class 0.5 for a CT with a ratio of 200/5.

If measurement accuracy must be to within 0.5 %, it is necessary to select a CT with a transformation ratio of 200/5.

Fuse-link monitoring and testing

Fupact ISFL160 to ISFL1250

PB107611_30.eps

ISFL160.

Monitoring [1]

ISFL fuse-switch disconnectors are equipped with large windows so that the fuse-link technical characteristics are clearly visible.

DB401002.eps

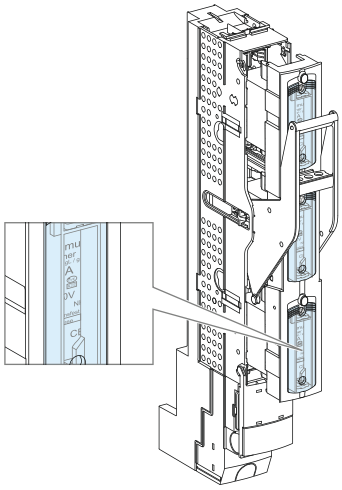

Testing [1]

DB401003.eps

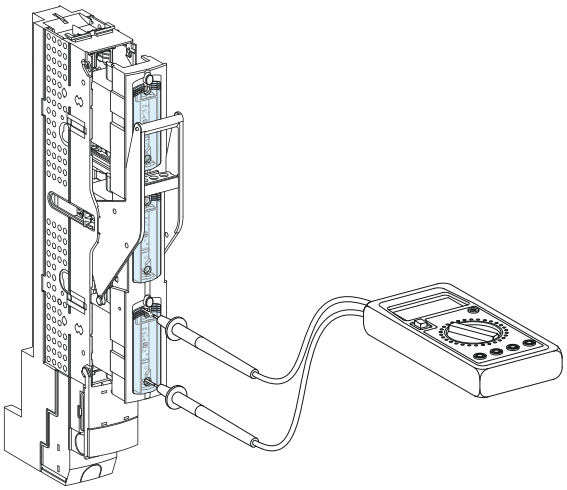

Sliding covers on the front panel provide access to the fuse-link status test points while maintaining the IP20 protection index.

(1) Monitoring and testing function are the same for ISFL 1-pole switchable.

The main moving contacts are controlled by the drawout fuse-carrier assembly for the ISFL devices. When in open position, the fuse-switch disconnector fuse-carrier assembly guarantees isolation with visible break.

PB107611_30_.eps

ISFL160.

To ensure safe and visible isolation, for maintenance operations for example, the ISFL fuse switch-disconnector must be put in the "PARK" position by pressing the lock on the front of the product. In this position, the handle is free and the fuses are physically separated from the contacts. The product can then be padlocked (3 x 6 mm dia. padlocks for ISFL160 and 8 mm dia. for other ISFL). Press the lock again to close the product when the padlocks have been removed. Another solution is to removed the upper sub-assembly by pressing the lock in the "OUT" position. After the sub-assembly must be reversed and put directly on the product.

Access to the fuse-links:
- is automatically blocked on the ISFL devices when the fusegear is closed
- may be protected using padlocks on the ISFL devices.

To lock the fuse-switch disconnector in closed (ON) or open (OFF) position, the fuse-carrier is equipped as standard with lead-seal or padlocking accessories (padlocks not supplied).

Control

DB401004.eps

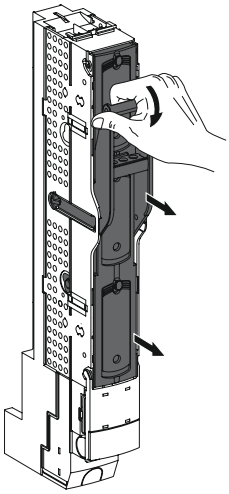

Removed sub-assembly (1)

DB401010.eps

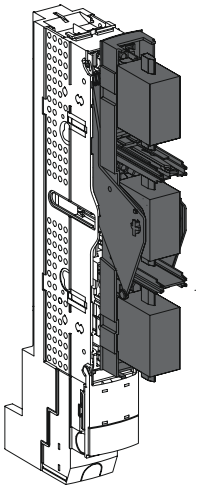

(1) Except for ISFL1250.

Locking ON (2)

DB120140.eps

ON

DB401008.eps

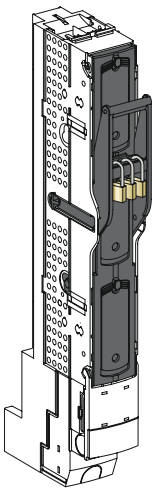

Locking OFF (2)

DB120140.eps

OFF

DB401009.eps

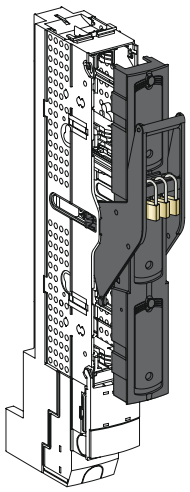

Padlocking for the ISFL160 to ISFL630 devices.

(2) Except for ISFL160 - 1P to ISFL630 - 1P.

Locking in open (OFF) position guarantees isolation as defined by IEC 60947-3.

Type	Function	Means	Accessory
ISFL160	Device locking in closed (ON) or open (OFF) position	Padlocks 3 max Ø6	Built-in
ISFL250 to ISFL1250		Padlocks 3 max Ø8	

Control, locking and operation
Fupact ISFL160 to ISFL1250

For ISF• fusegear devices, the fuse-carrier assembly is used both to control the device and house the fuse-link.

PB107611_30.eps

ISFL160.

Fuse-carriers (1)

Compatibility between ISF• fuse-switch disconnectors and fuse-links (NH)

DB404266.eps

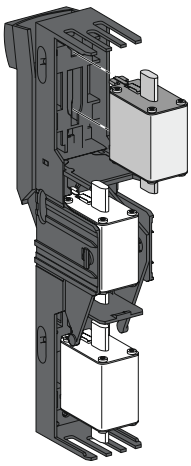

Drawout fuse-carrier assembly for the ISFL160 to 1250 devices.

Type of DIN fuse-link	NH000	NH00	NH1	NH2	NH3
ISFL160	■	■	-	-	-
ISFL250	-	-	■	-	-
ISFL400	-	-	-	■	-
ISFL630	-	-	-	-	■
ISFL1250	-	-	-	-	■

Insertion and removal of fuse-links

Fuse-links are held in place by clips behind the front panel of the fuse-carriers, thus making removal possible without touching the fuse-links.

DB401005.eps

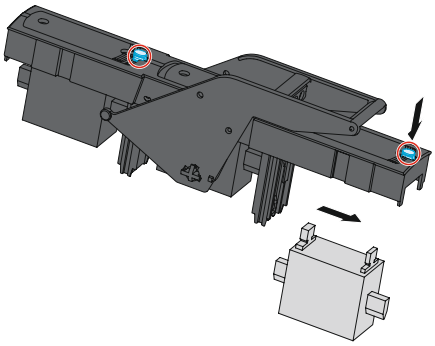

ISFL160 and ISFL250 to ISFL1250.

(1) Control, locking and operation are the same for ISFL 1-pole switchable.

Auxiliary contacts and indications

Fupact ISFL160 to ISFL1250

62325a_1-29.eps

Auxiliary contact for ISFL160 .

PB107277_25_r.eps

ISFL250/400/630/1250.

The optional auxiliary contacts carry out indication functions.
They provide remote indication of the fuse-switch disconnector status. They may also be used to indicate and carry out automatic functions such as electrical interlocking.

Standards: compliance with international recommendation IEC60947-5-1.
Description: NC/NO changeover contact.

Functional table of contact status

	Auxiliary changeover contact	
	4 1 2	Maximum number
ISFL160	■	2
ISFL250	■	4
ISFL400	■	4
ISFL630	■	4
ISFL1250	■	8

Auxiliary changeover contact for ISFL160 to 1250			
Rated thermal current Ith (A)		2	
Rated insulation voltage (V)		250	
Minimum load		100 mA at 24 V	
		AC12	**DC12**
Operational current (A)	24 V	2	0.2
	48 V	2	0.2
	110 V	2	0.2
	220/240 V	2	0.2

Auxiliary contacts and indications

Fupact ISFL160 to ISFL630

62325a_1-29.eps

Auxiliary contact for ISFL160 .

PB107277_25_r.eps

ISFL250/400/630/1250.

Position of auxiliary contacts for ISFL devices

ISFL160

DB401006.eps

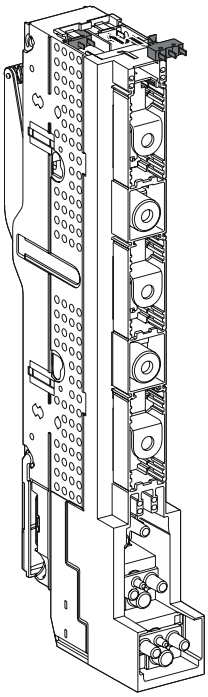

ISFL250/400/630

DB401007.eps

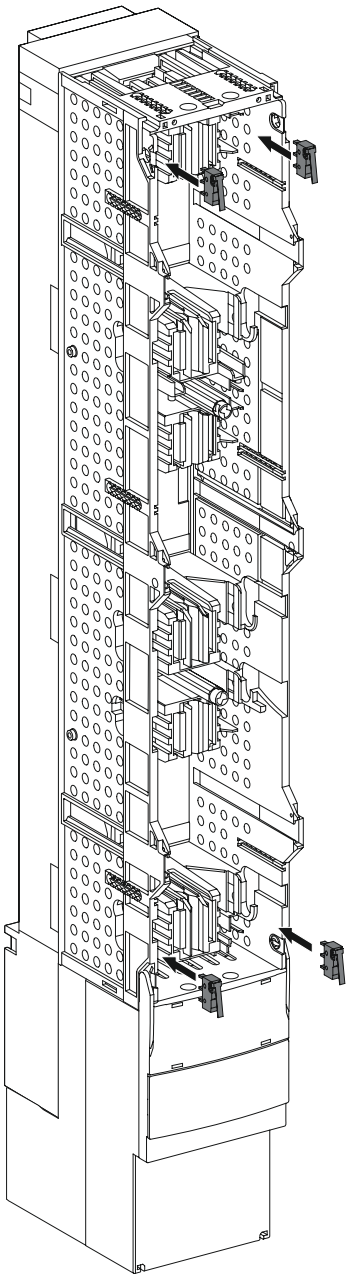

PB107277_25_r.eps

ISFL250/400/630/1250.

Position of auxiliary contacts for ISFL devices

ISFL1250

DB414220.eps

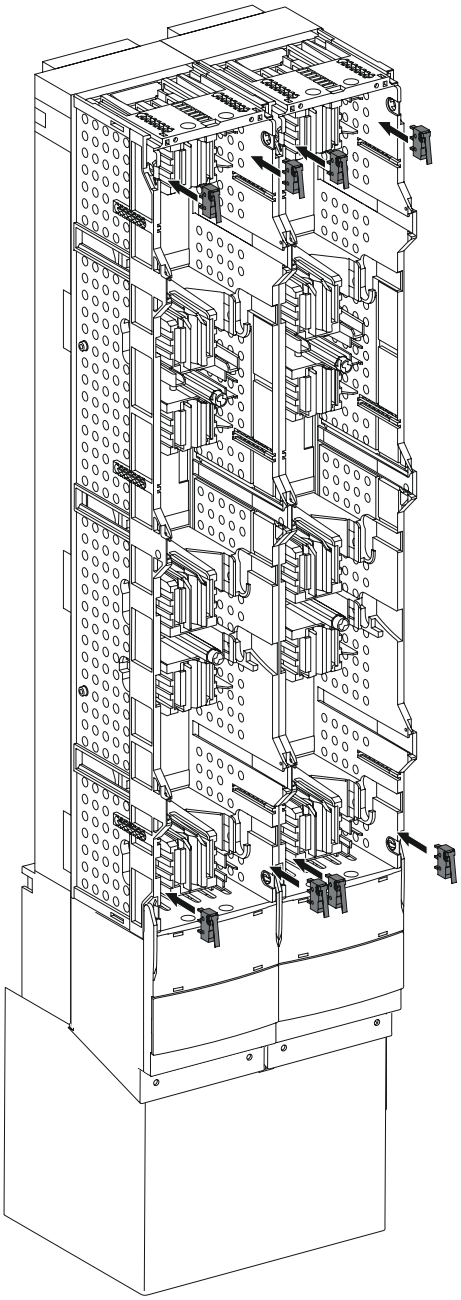

Intelligent measurement
Fupact ISFL160 to ISFL630

The future belongs to more intelligent switchboards. The new ISFL generation, vertical design, are well prepared for the future: they offer standardised interfaces for all types of measurement devices.
Schneider Electric is offering a complete and large offer of metering devices: Powerlogic range.

PB104892_7.eps

PB104891_7.eps

PowerLogic series meter - Power Meter
The Power Meter serie offers many high-performance capabilities needed to meter and monitor an electrical installation in a compact unit.
All models include an easy-to-read display that presents measurements for all three phases and neutral at the same time, total harmonic distortion (THD) metering, and alarming on critical conditions.
Some models offer an incremental choice of custom logging and power quality analysis capabilities.
Expand any model with field-installble option modules that offer a choice of additional digital inputs and outputs, analog inputs and outputs, and ethernet port.

DB404267.eps

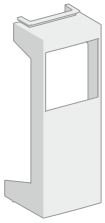

Empty plastic box for ISFL160.

Flexible measurement options - the amperemeter
Additional measurement options can be realised with an amperemeter which is adjusted onto the new amperemeter-bracket. The installation is incredibly simple and the returns extremely versatile.

DB404268.eps

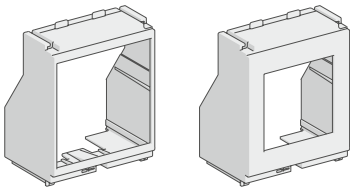

Empty plastic box for ISFL250/400/630.

How to install device
- ■ For ISFL160, we can add an empty box to include measurement device:
  - □ plastic box
  - □ dimension 46 x 46 mm for the cut-out
  - □ length: the same as the length adaptor to be able to put the ISFL160 beside ISFL250 to ISFL630
  - □ fixation by mounting it directly to the top of the product.
- ■ For ISFL250 to 630, we can add empty boxes to include measurement devices:
  - □ plastic box
  - □ dimension 72 x 72 mm and 96 x 96 mm for the cut-out
  - □ fixation by mounting it directly to the top of the product.

DB404269.eps

ISFL250-630 + Empty box with power meter

Dimensions

Device to be installed on a backplate or DIN rail

Fuse-carrier closed

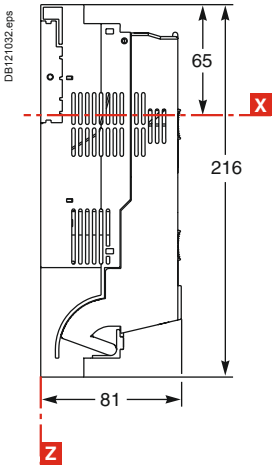

Front

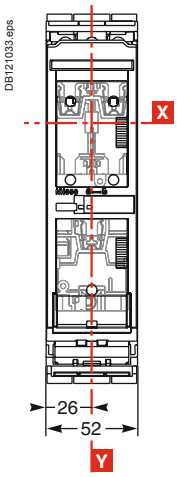

Fuse-carrier open

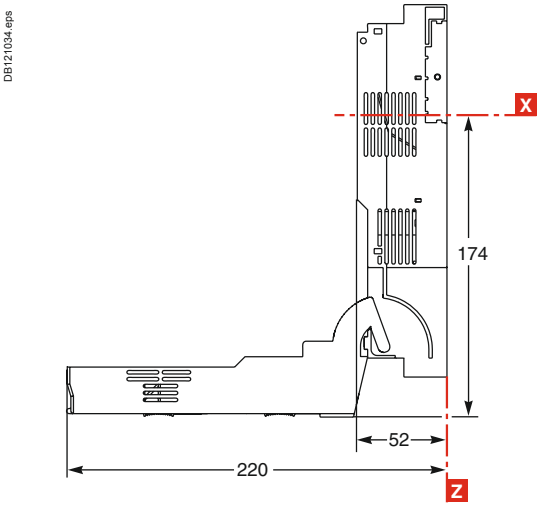

Device to be installed on a busbar

Fuse-carrier closed

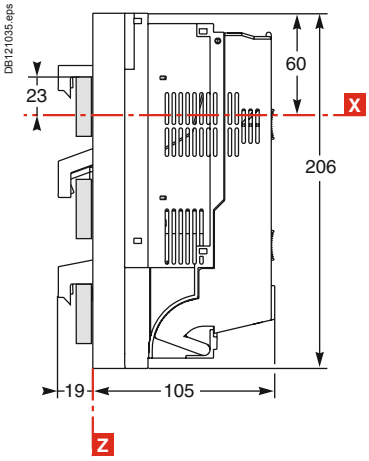

Front

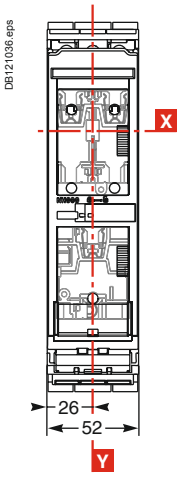

Fuse-carrier open

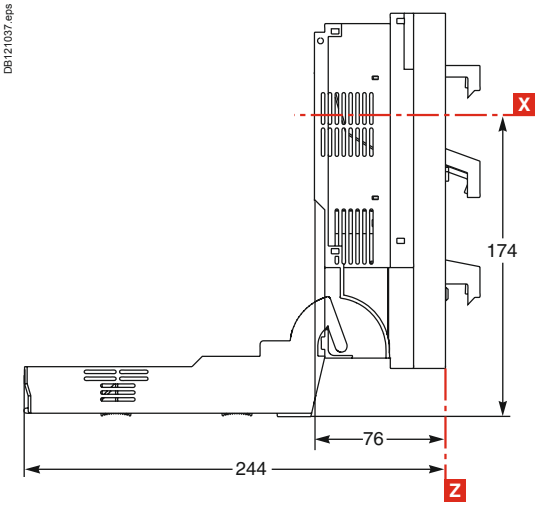

Mounting

On backplate

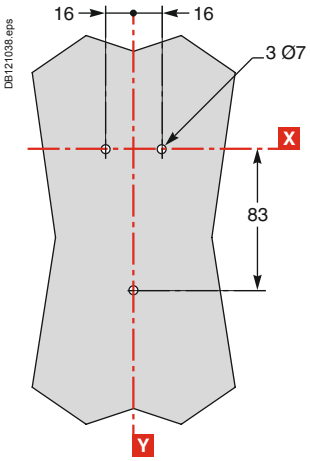

On DIN rail

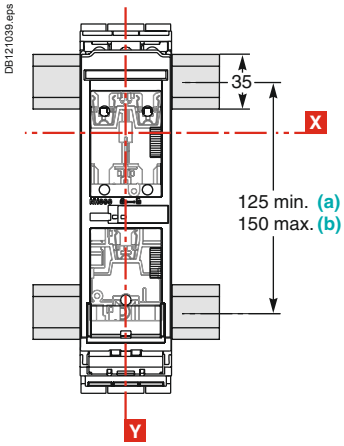

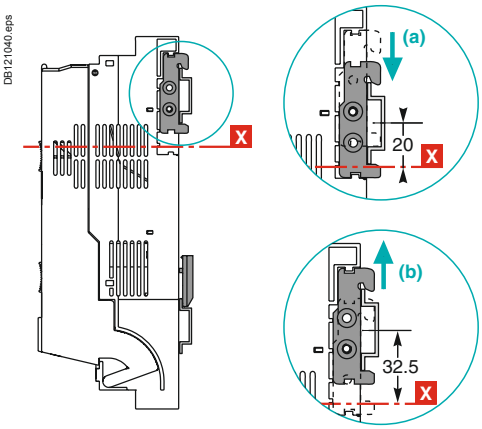

Fupact ISFT100N
Front panel cut-outs
Connection and accessories

Mounting (cont.)

On 60 mm busbars

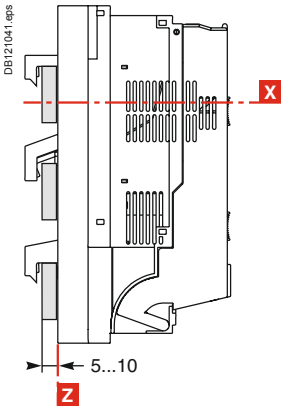

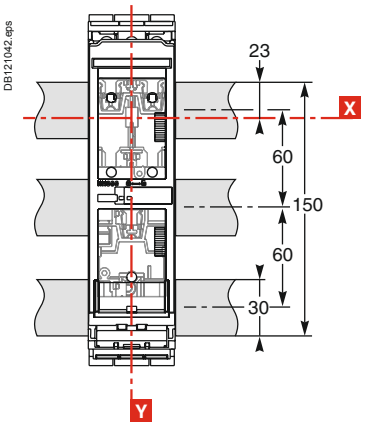

Front panel cut-outs

Device to be installed on a backplate or DIN rail

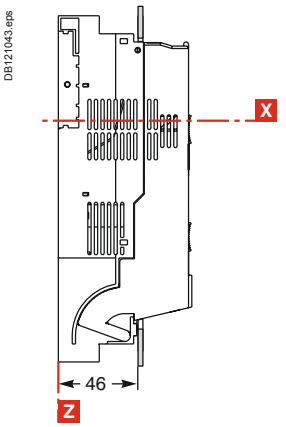

Cut-out for 1 device (1)

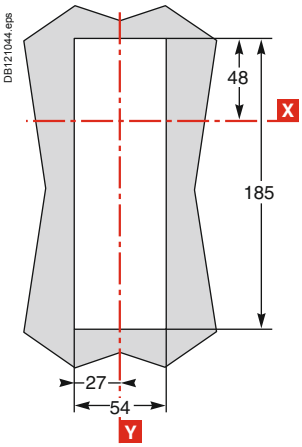

Cut-out for 2 devices (2)

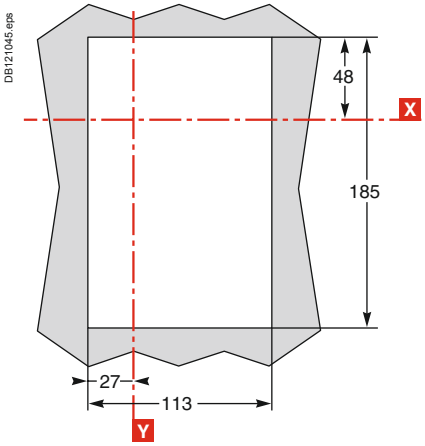

(1) With or without side profile, see page A-49.
(2) With side profile, see page A-49.

Device to be installed on a busbar

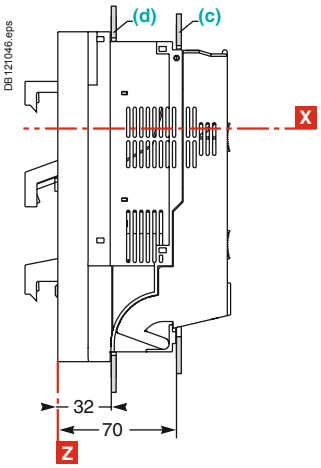

Cut-out (c) for 1 device

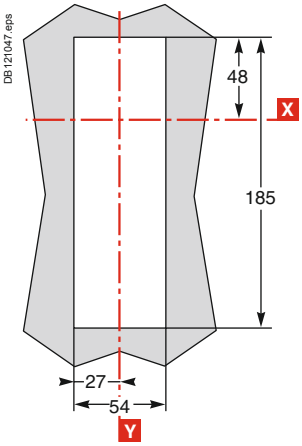

Cut-out (d) for 1 device

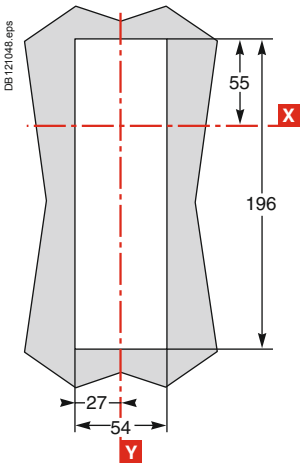

Front connection of cables

Fupact ISFT100N devices are equipped as standard with connectors for bare copper cables from 2.5 to 50 mm² for mounting on backplates.

Standard device

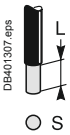

Fupact connectors	L (mm)	18
	S (mm²)	2.5 to 50 rigid
	Cu/Al	2.5 to 35 flexible
	Torque (Nm)	3

Dimensions

Fuse-carrier closed

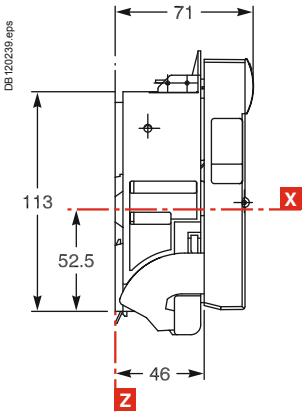

Front

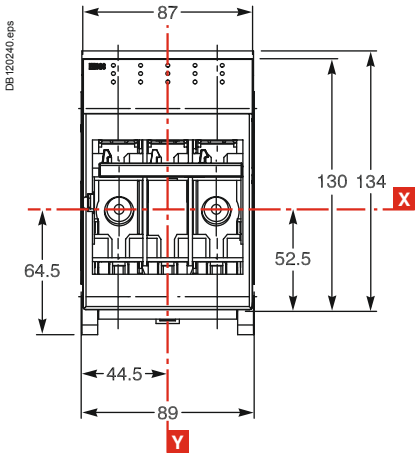

Fuse-carrier open

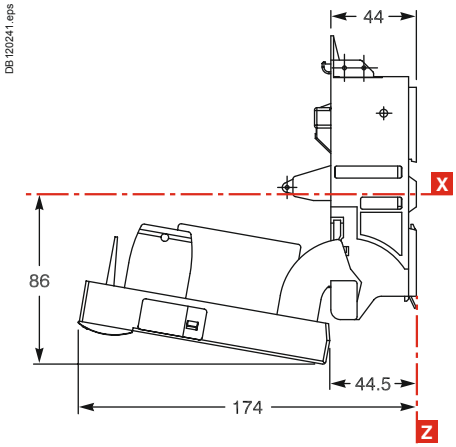

Comb busbar for 2 ISFT100 devices

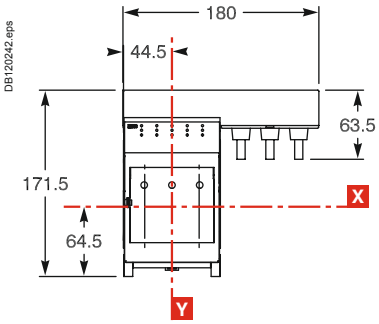

Comb busbar for 3 ISFT100 devices

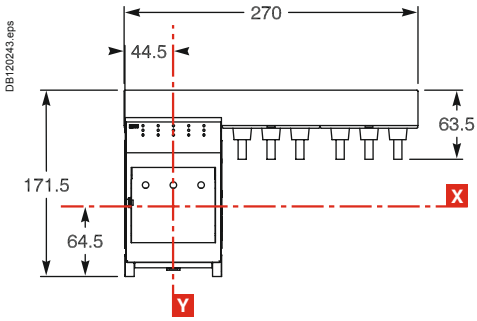

Comb busbar for 4 ISFT100 devices

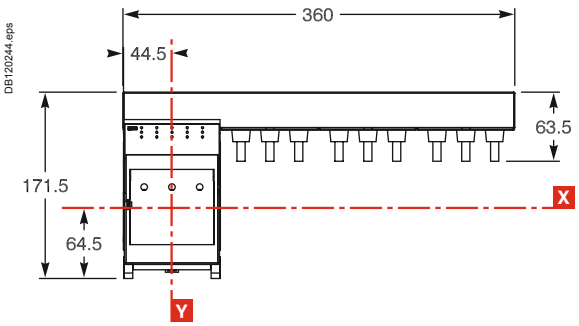

Comb busbar for 5 ISFT100 devices

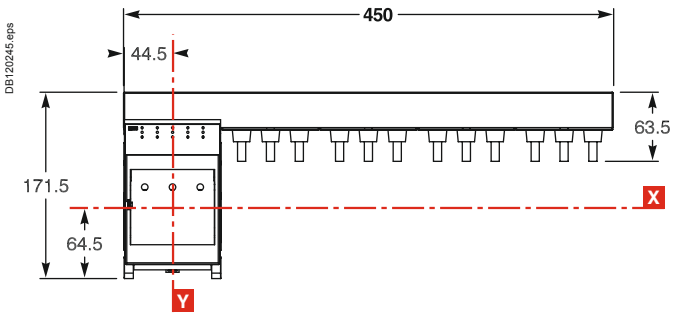

Fupact ISFT100
Mounting and front panel cut-outs

Mounting

On backplate

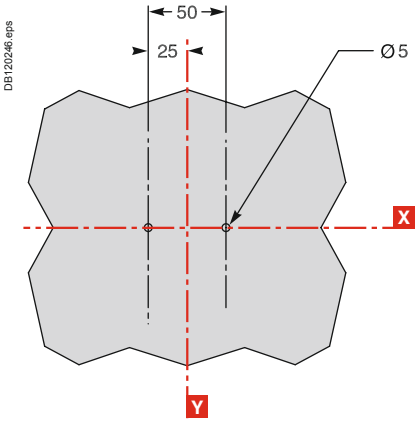

On a symmetrical DIN rail

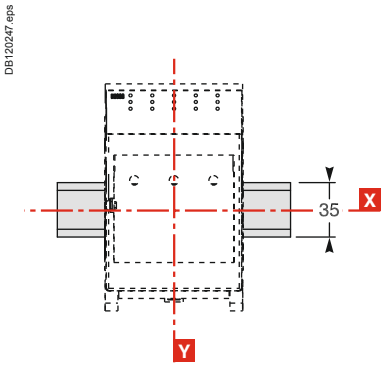

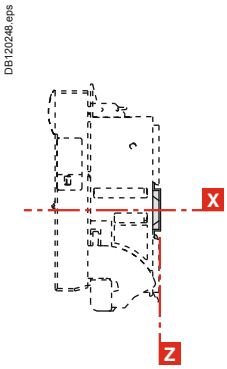

Front panel cut-outs

Cut-out for 1 device

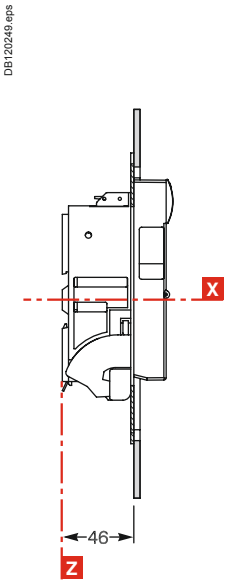

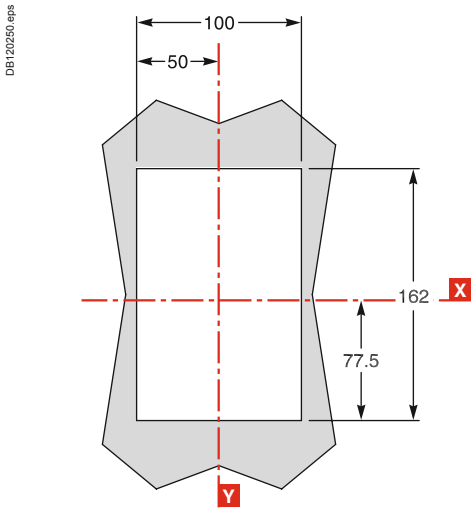

Cut-out for 2 devices

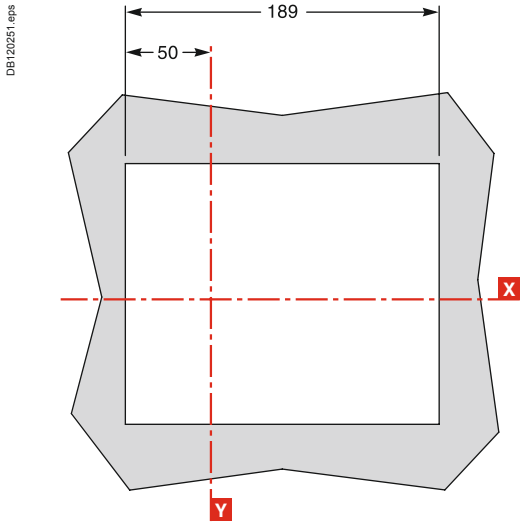

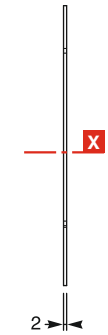

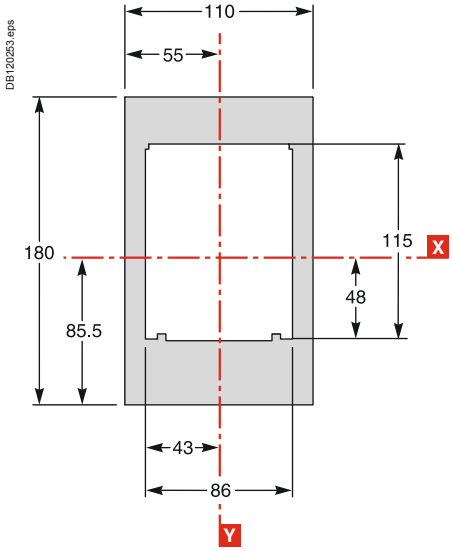

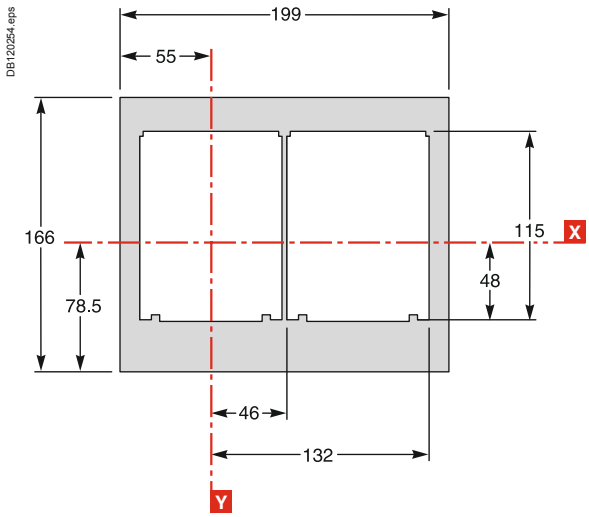

DB120519.eps

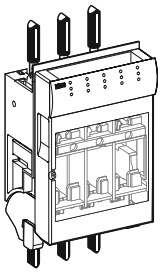

Connection via bare cable connectors.

DB120514.eps

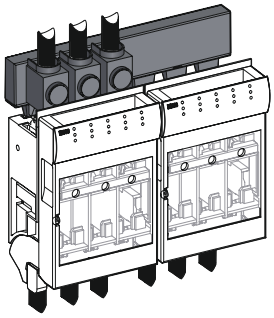

Connection via comb busbars.

DB120515.eps

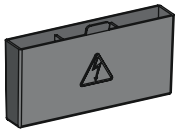

Insulated comb busbar cover.

DB120516.eps

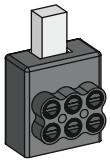

Distribution connector.

DB120517.eps

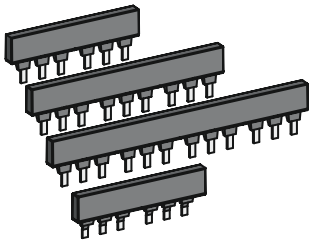

Comb busbars.

DB124587.eps

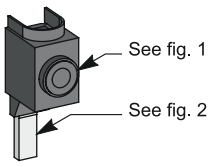

Incoming connector for comb busbars.

Front connection via bare cable connectors

Fupact ISFT100 devices are equipped as standard with connectors for bare copper or aluminium cables from 1.5 to 50 mm² for mounting on backplates.

DB401307.eps

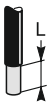

Standard device		
Fupact connectors	L (mm)	18
	S (mm²)	1.5 to 50 rigid
	Cu/Al	1.5 to 35 flexible
	Torque (Nm)	3

DB401307.eps

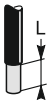

3 x 10 mm² distribution connector		
Fupact connectors	L (mm)	18
	S (mm²)	1.5 to 10 rigid
	Cu/Al	1.5 to 6 flexible
	Torque (Nm)	2 (cables)
		3 (connectors)

Front connection via comb busbars

This accessory simplifies connection of cables and can be used to supply two to five Fupact ISFT100 devices.

- A comb busbar coupler is used to connect five Fupact ISFT100 devices by coupling a 2-device comb busbar with a 3-device comb busbar.
- Tightening torque 3 Nm.

DB401307.eps

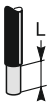

Incoming connector for comb busbars		
Fupact connectors	L (mm)	18
	S (mm²)	25 to 95 rigid
	Cu/Al	25 to 70 flexible
	Torque (Nm)	10 (cables)
		3 (connectors)

DB120520.eps

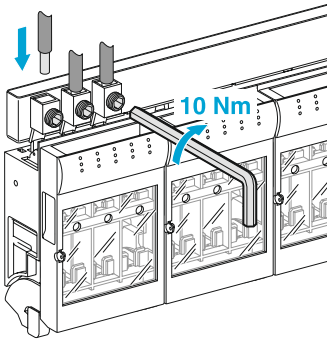

Figure 1.

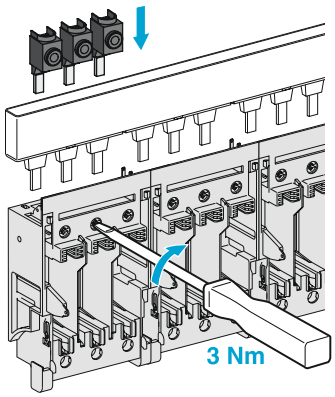

Figure 2.

Fupact ISFT100
Connection and accessories

Basic device with distribution connector option

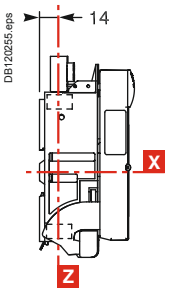

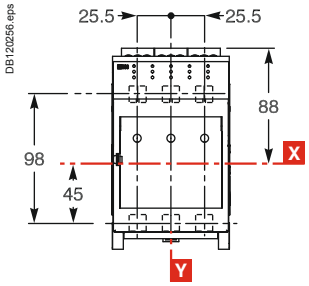

Comb busbars for two or three ISFT100 devices (with 25 to 95 mm² incoming connector)

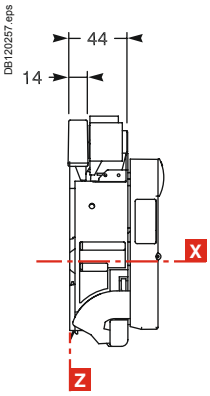

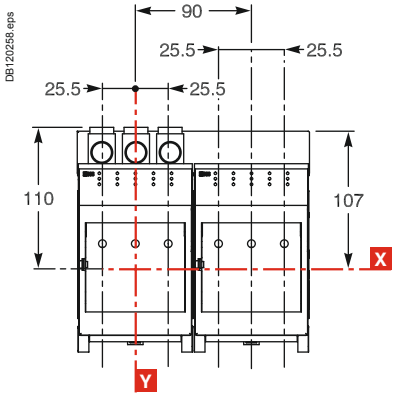

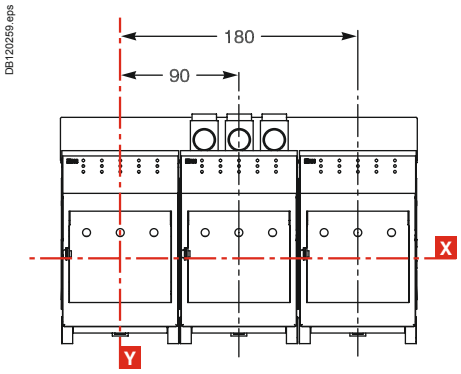

Comb busbars for four or five ISFT100 devices

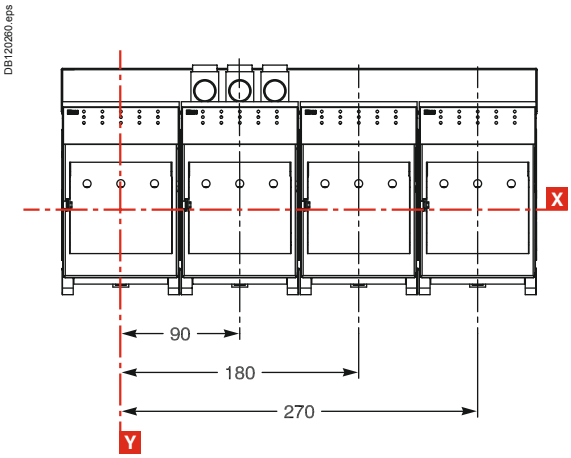

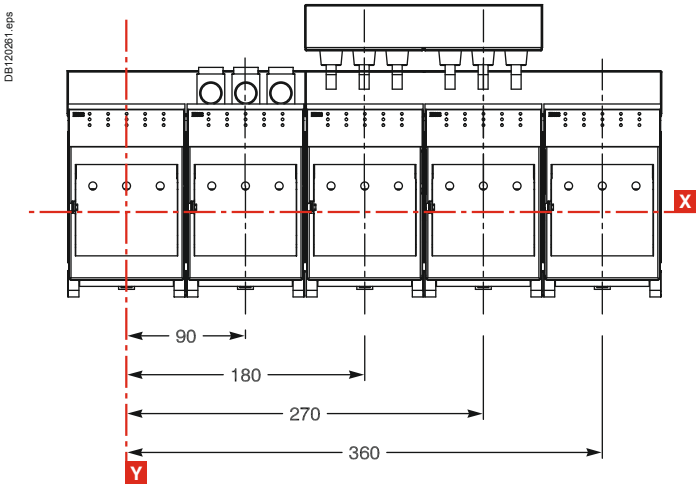

Dimensions

Fuse-carrier closed

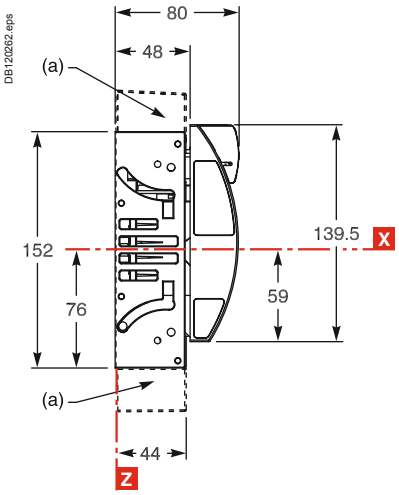

a = terminal shields.

Front

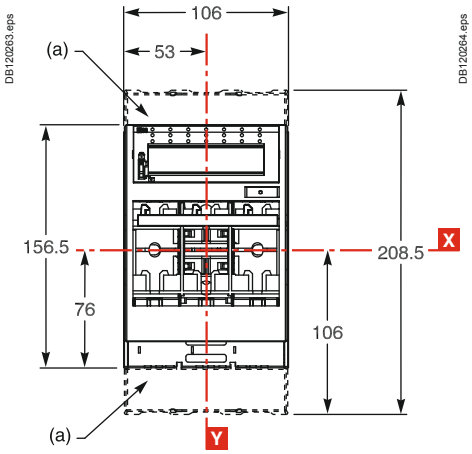

Fuse-carrier open

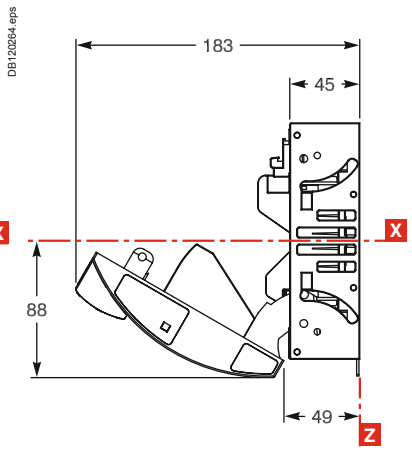

With hook-on kit

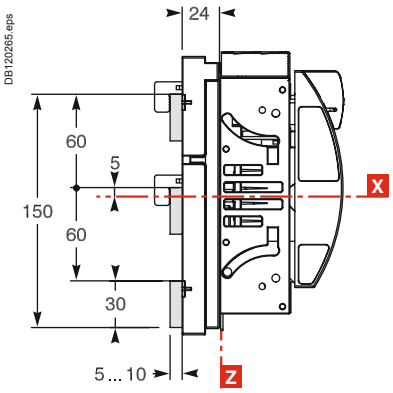

With push-on kit

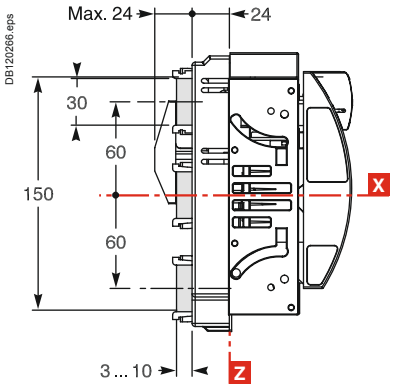

With fuse monitor

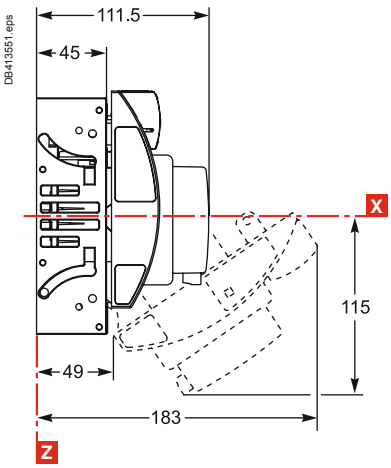

Fupact ISFT160

Mounting and front panel cut-outs

Mounting

On backplate

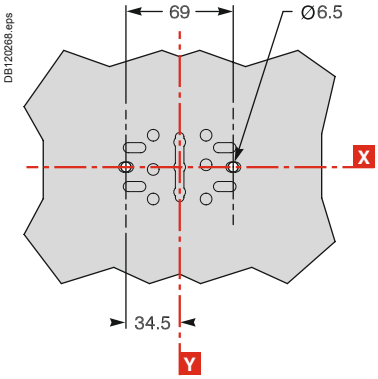

On 60 mm busbars

With hook-on kit

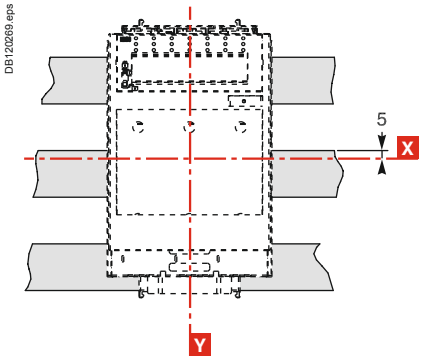

With push-on kit

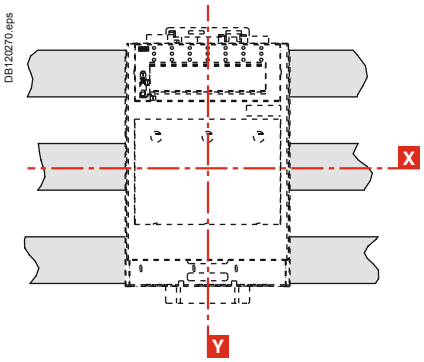

Front panel cut-outs

Cut-out for 1 device

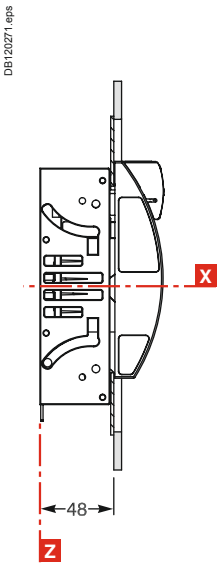

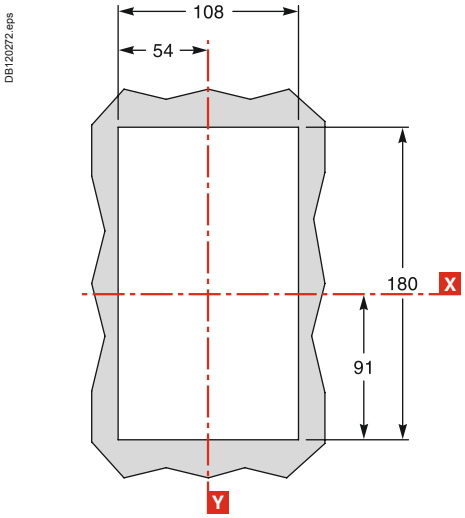

Cut-out for 1 device + 1 free slot

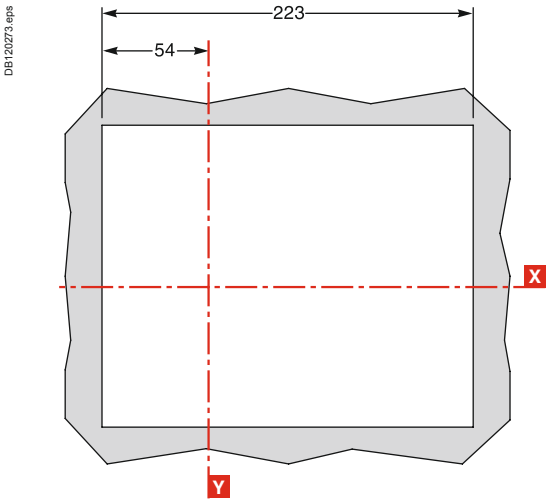

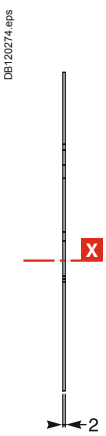

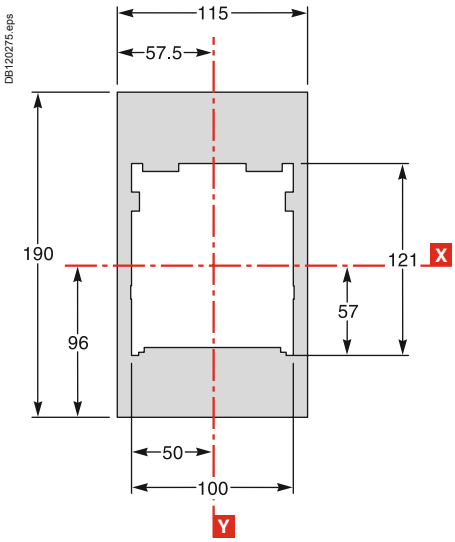

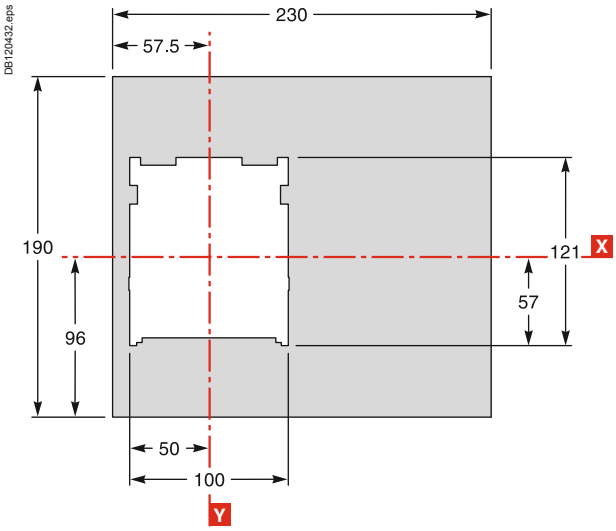

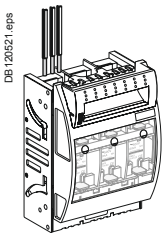

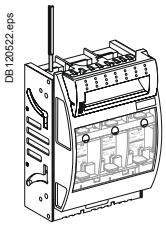

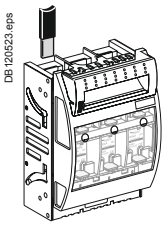

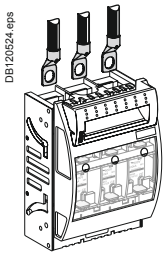

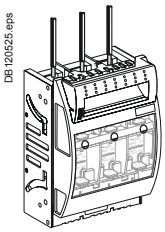

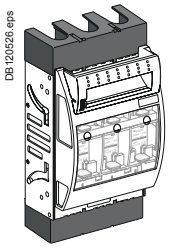

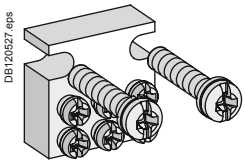

Distribution connector.

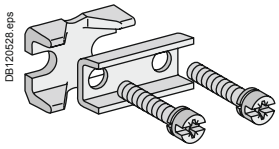

V-type connector for bare Cu/Al cables.

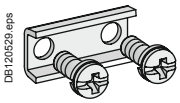

Connector for flexible bars.

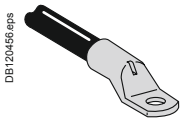

Lug for copper cables.

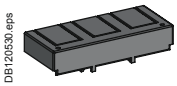

Short terminal shield.

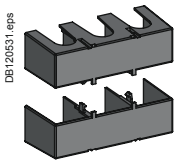

Long terminal shields.

Front connection to standard M8 terminals

Fupact ISFT160 devices are also equipped with 12 mm wide terminals with holes for M8 screws for the connection methods presented below.

3 x 16 mm² distribution connector

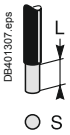

L (mm)	25
S (mm²)	1.5 to 16 rigid
Cu/Al	1.5 to 10 flexible
Torque (Nm)	2 (cables)
	4 (connectors)

Used with long terminal shields

V-type connector for bare Cu/Al cables

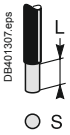

L (mm)	25
S (mm²)	1.5 to 95 rigid
Cu/Al	1.5 to 70 flexible
Torque (Nm)	4

Used with short terminal shields

Connector for flexible bars

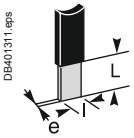

L (mm)	20
l (mm)	12
e (Nm)	6
Torque (mm)	4

Used with short terminal shields

Lug for 95 to 185 mm² copper cables

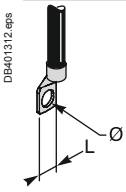

L (mm)	< 12
Ø (mm)	8.2
Torque (Nm)	14

Used with long terminal shields

Direct front connection to connectors

Fupact ISFT160 devices are equipped as standard with connectors for bare copper or aluminium cables from 1.5 to 50 mm² for mounting on backplates.

Standard device

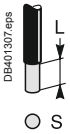

Fupact connectors	L (mm)	25
	S (mm²)	1.5 to 95 rigid
	Cu/Al	1.5 to 70 flexible
	Torque (Nm)	4

Used with short terminal shields

Fupact ISFT160
Connection and accessories

Connections for mounting on a backplate

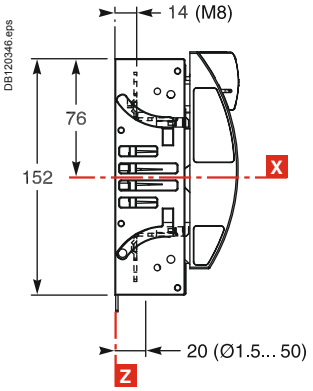

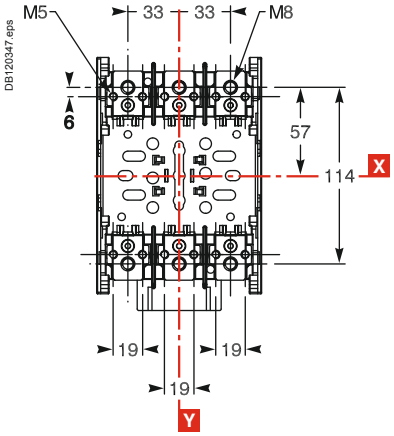

Connections for mounting on 60 mm busbars

Push-on connection

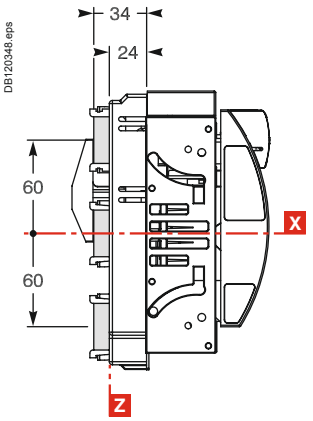

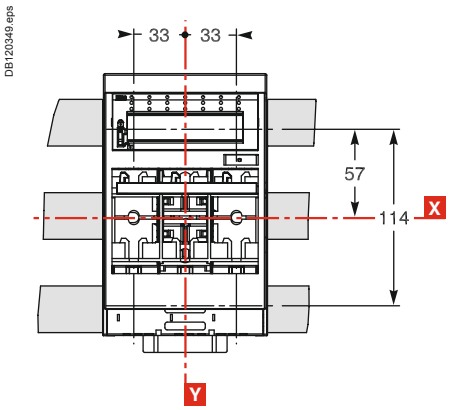

Hook-on connection

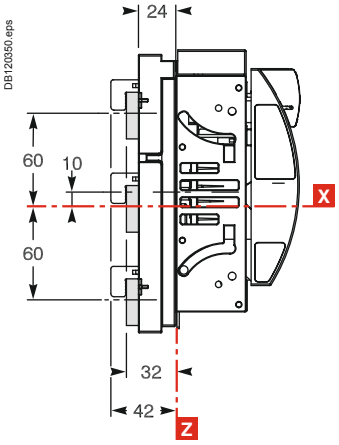

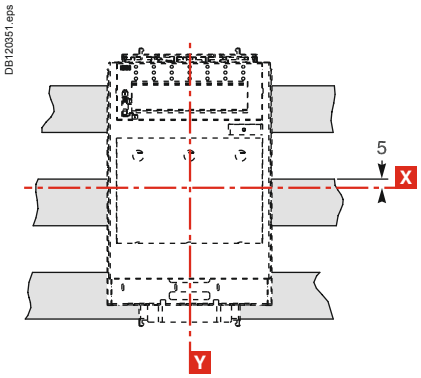

Fupact ISFT250 to 630
Dimensions and mounting

Dimensions

Fuse-carrier closed

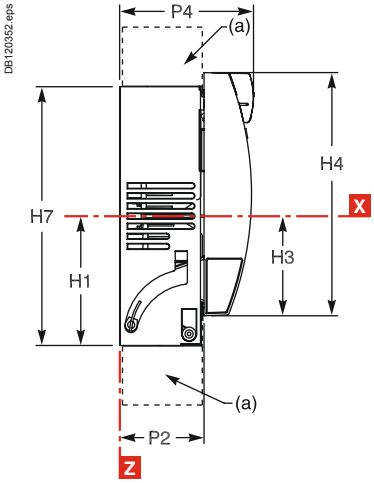

Front

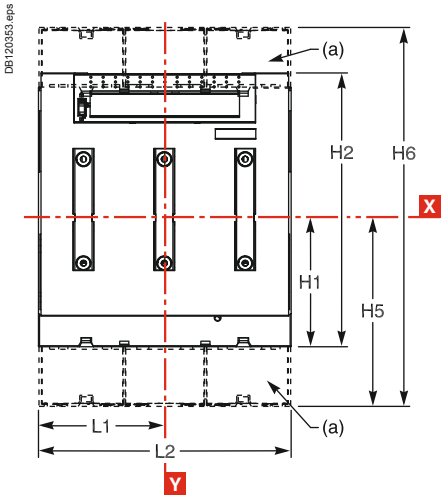

Fuse-carrier open

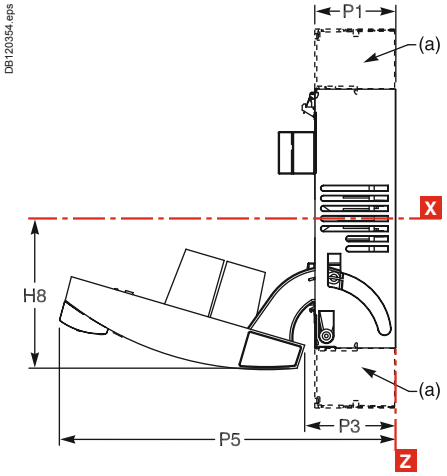

a = terminal shields.

With push-on kit for ISFT250

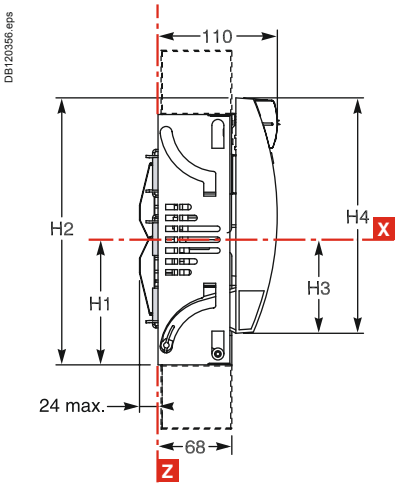

With hook-on kit for ISFT250/400/630

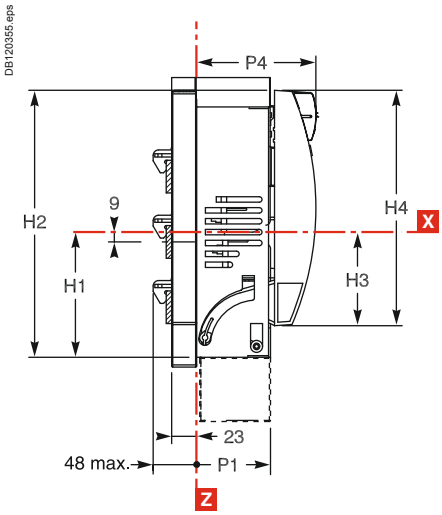

With fuse monitor for ISFT250/400/630

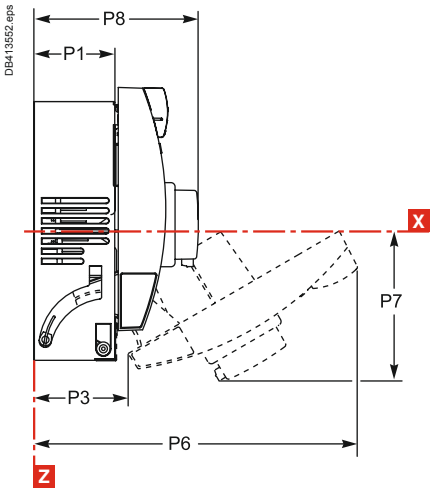

Mounting

On a backplate for ISFT250

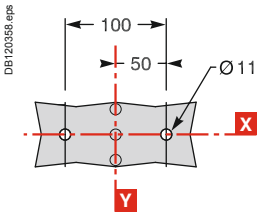

On a backplate for ISFT400/630

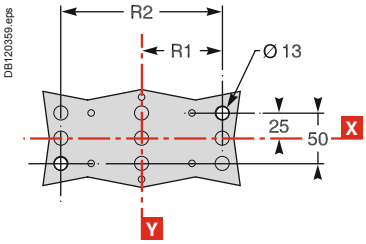

Type	H1	H2	H3	H4	H5	H6	H7	H8	L1	L2	P1	P2	P3	P4	P5	R1	R2	P6	P7	P8
ISFT250	115	245	86	216	174	348	230	133	92	184	68	72	78	110	293	-	-	316	148	140
ISFT400	128	270	99	241	187	374	256	144	105	210	82	84	91	127	331	65	130	319	148	157
ISFT630	128	270	99	241	187	374	256	147	125	250	82	84	91	132	332	80	160	319	148	162

Fupact ISFT250 to 630

Mounting and front panel cut-outs

Mounting

On busbars

With push-on kit for ISFT250

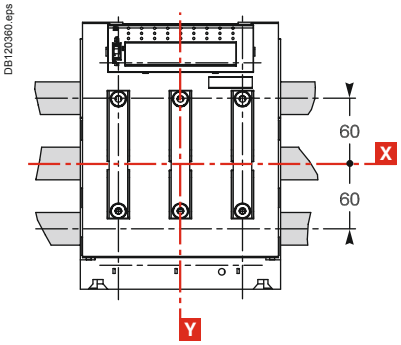

With hook-on kit for ISFT250

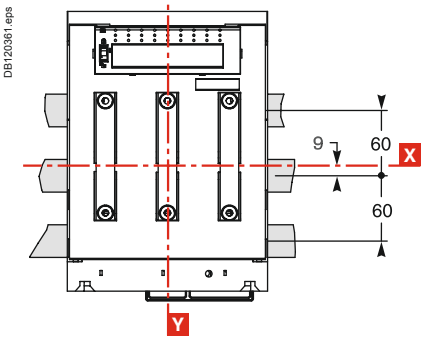

With hook-on kit for ISFT400/630

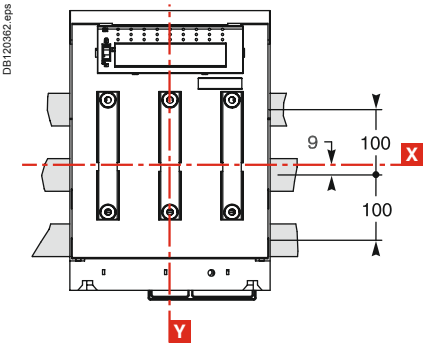

Front panel cut-outs for ISFT250

Cut-out for 1 device

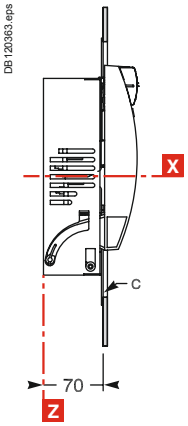

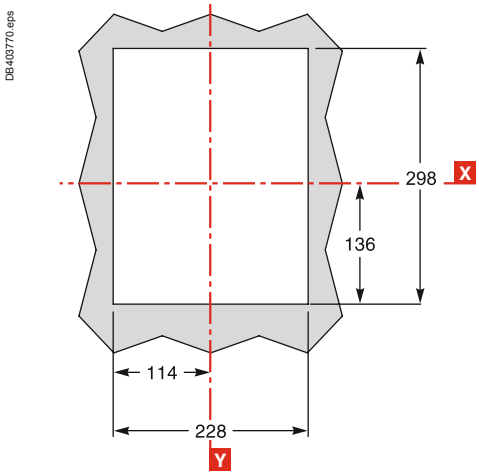

Cut-out for 1 device + 1 free slot

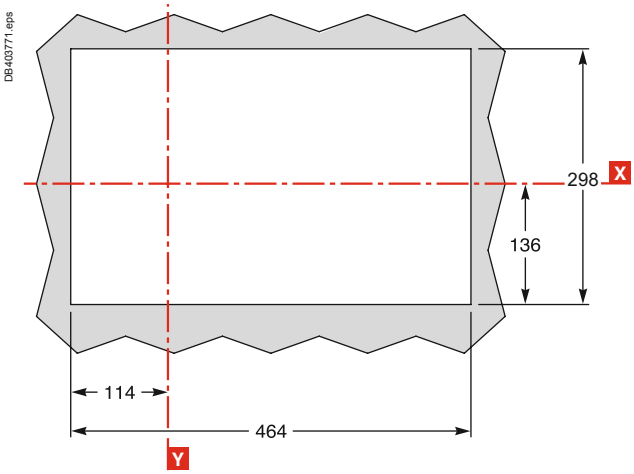

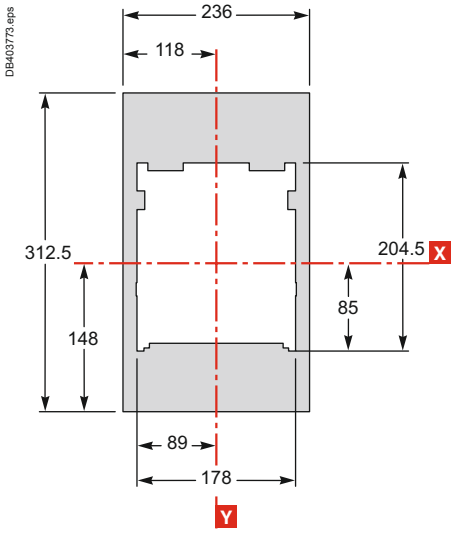

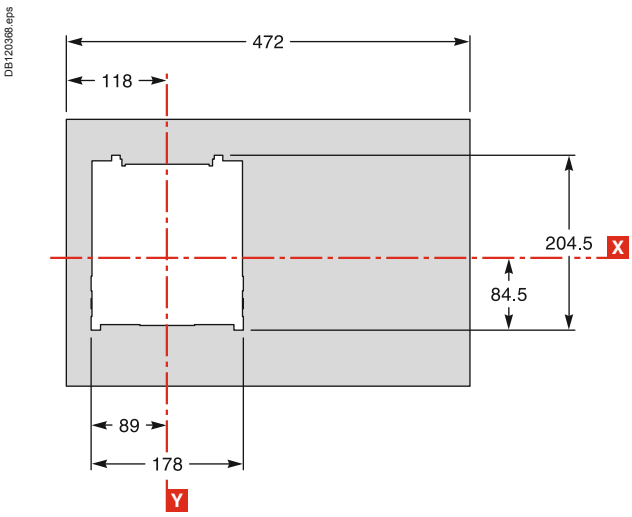

Front panel cut-outs

Front panel cut-out for ISFT400

Cut-out for 1 device | **Cut-out for 1 device + 1 free slot**

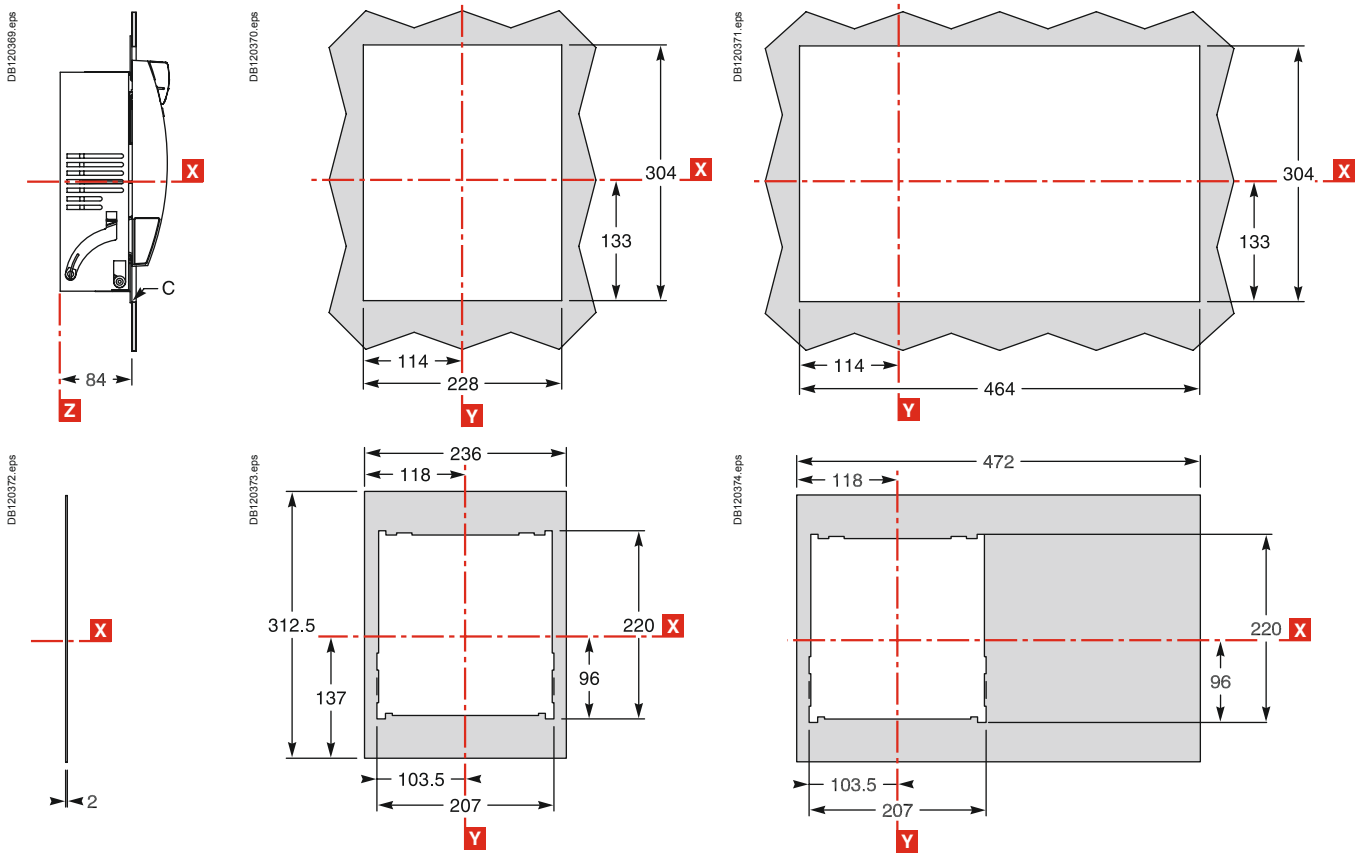

Front panel cut-out for ISFT630

Cut-out for 1 device

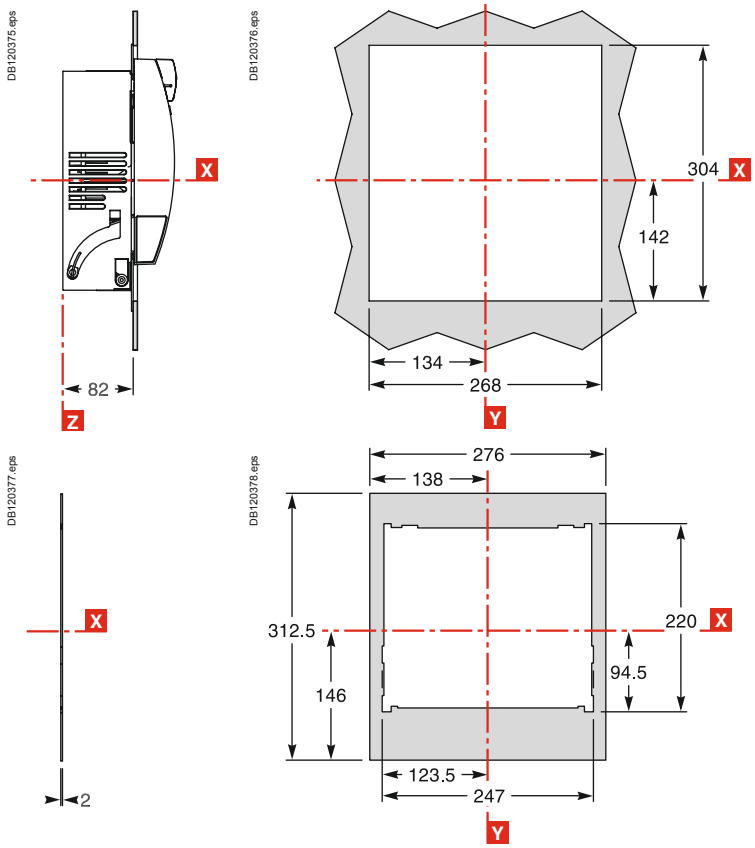

Fupact ISFT250 to 630
Connection and accessories

DB120591.eps

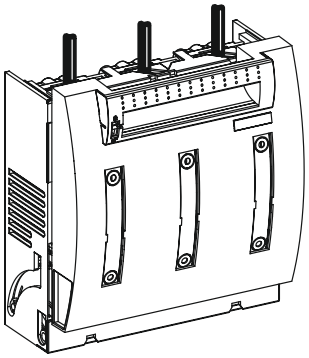

DB124899.eps

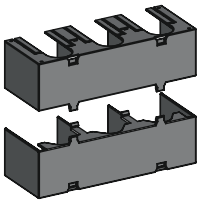

Terminal shields.

DB124900.eps

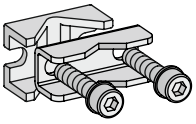

V-type connector.

DB124901.eps

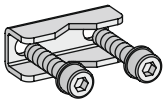

Connector for flexible bars.

DB120456.eps

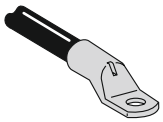

Lug for copper cables.

Front connection to standard M10 terminals

Fupact ISFT250 to 630 devices are equipped as standard with terminals comprising holes for M10 screws for the connection methods presented below.

V-type connector for bare Cu/Al cables

DB401307.eps

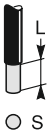

	ISFT250	ISFT400/630
L (mm)	20	25
S (mm²) Cu/Al	6 to 150	6 to 240
Torque (Nm)	14	14

Connector for flexible bars

DB401311.eps

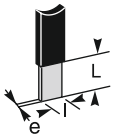

	ISFT250	ISFT400/630
L (mm)	20	30
l (mm²)	16	21
e (mm)	15	15
Torque (Nm)	14	14

Lug for 100 to 185 mm² copper cables

DB401312.eps

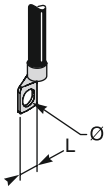

	ISFT250 to 630
L (mm)	≤ 16
Ø (mm)	10.2
Torque (Nm)	32

Lug for 240 to 300 mm² copper cables

DB401312.eps

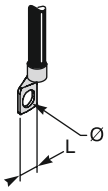

	ISFT400/630
L (mm)	≤ 21
Ø (mm)	10.2
Torque (Nm)	32

Connections for mounting on a backplate

DB120379.eps

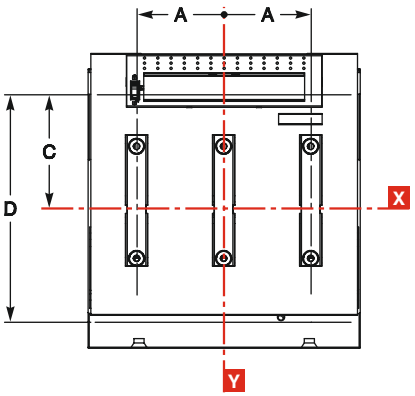

DB120433.eps

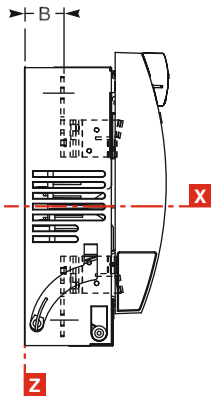

Type	A	B	C	D
ISFT250	57	33	93	186
ISFT400	65	36.5	104.5	209
ISFT630	80	36.5	104.5	209

Connections for mounting on 60 mm busbars

Push-on connection for ISFT250

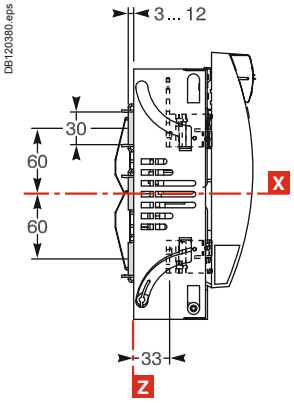

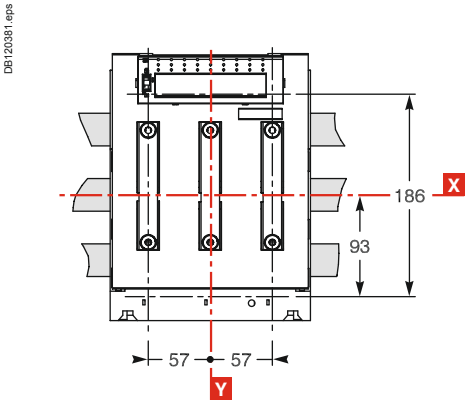

Hook-on connection for ISFT250/400/630

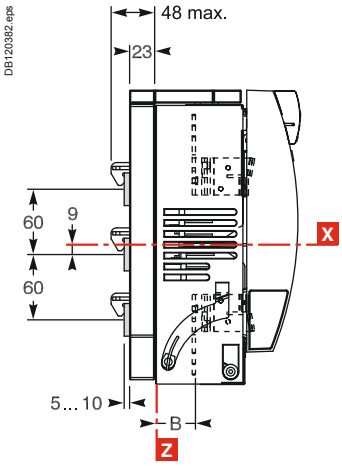

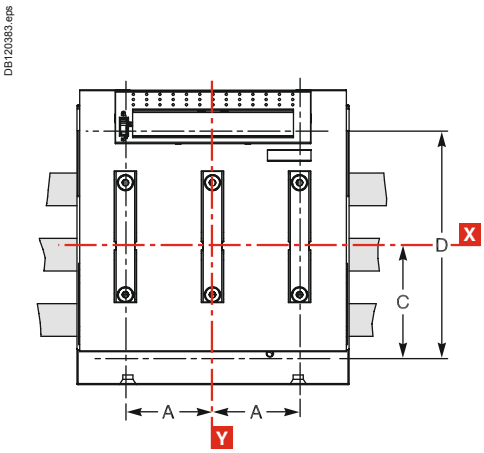

Connections for mounting on 100 mm busbars

Hook-on connection for ISFT250/400/630

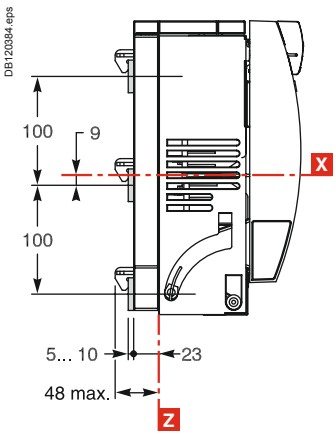

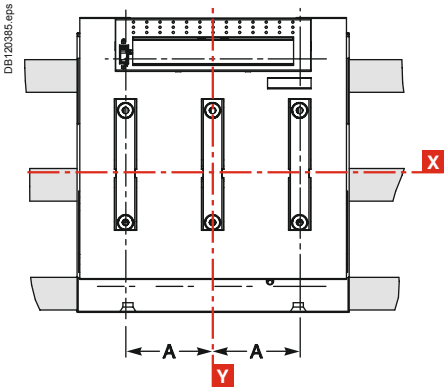

Type	A	B	C	D
ISFT250	57	33	93	186
ISFT400	65	36.5	104.5	209
ISFT630	80	36.5	104.5	209

Fupact ISFL160 1-pole
Dimensions and mounting

Dimensions

Fuse-carrier closed

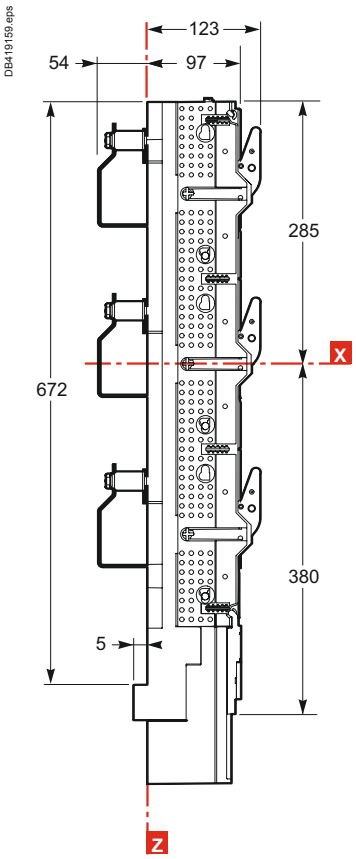

Front

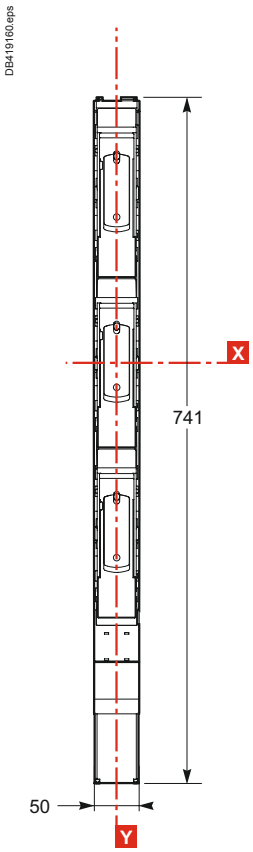

Open and locked

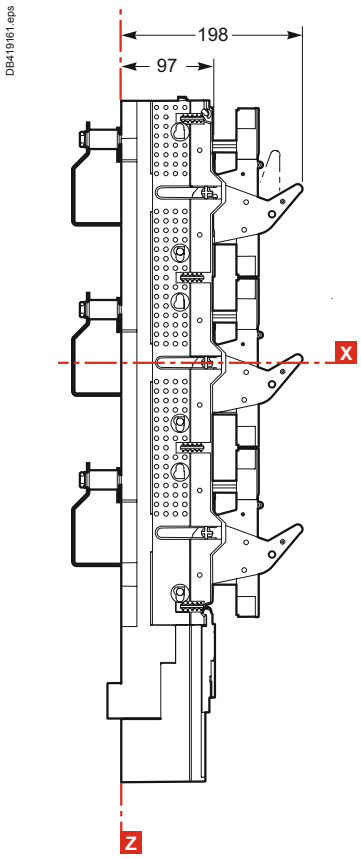

Mounting

For 185 mm busbars

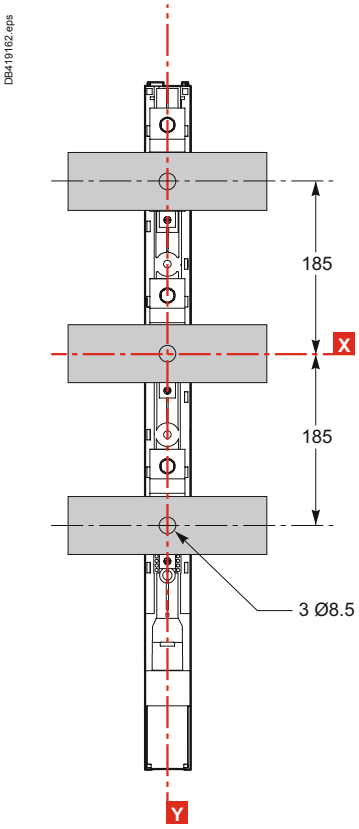

For 1 device with side cover and/or 1 free slot

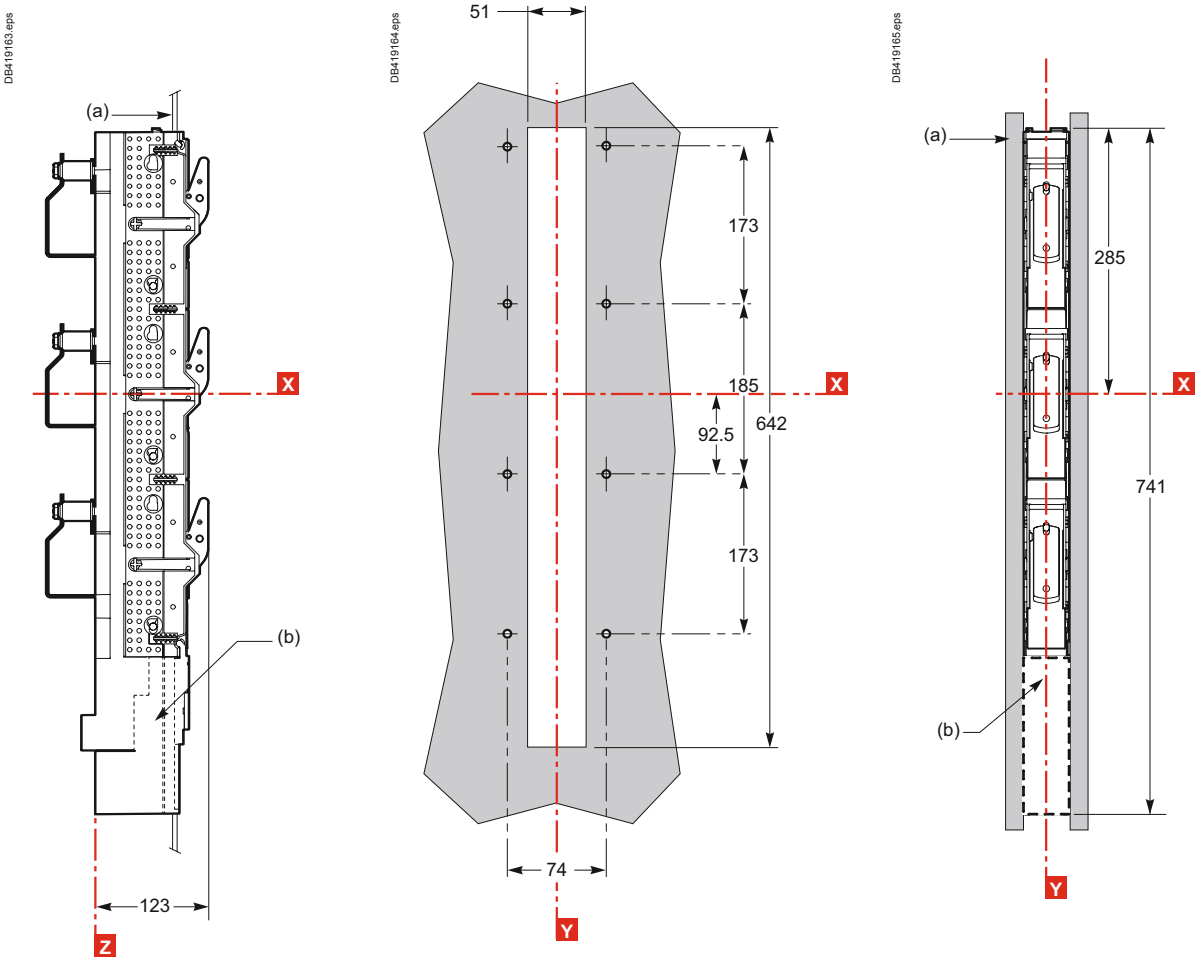

a = side cover for front panel cut-out.
b = terminal shield.

Fupact ISFL160
Dimensions and mounting

Dimensions

Fuse-carrier closed | **Front** | **Open and locked**

60 mm | **100 mm**

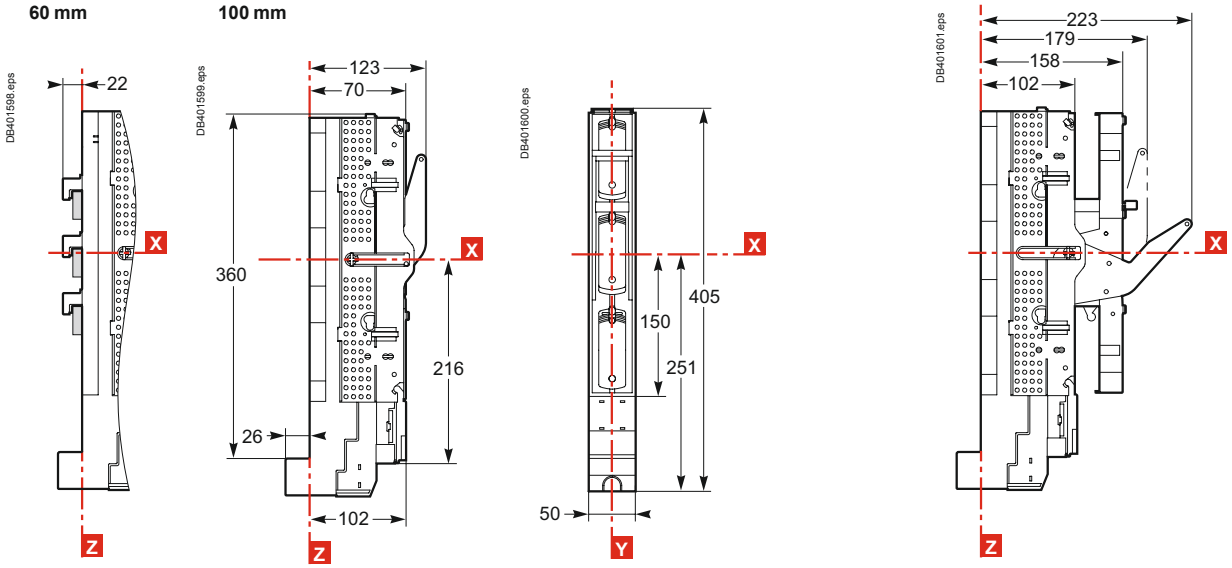

With 185 mm connection kit | **With 185 mm connection kit for 2 ISFL devices**

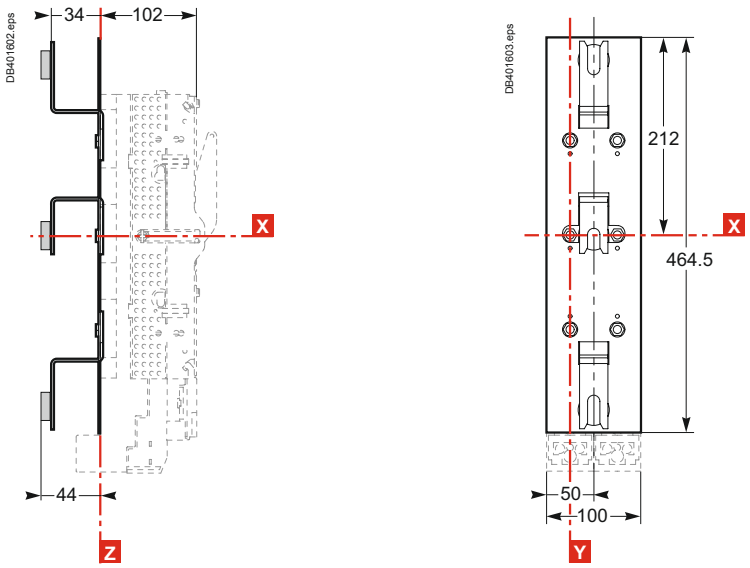

Mounting

For 60 mm busbars | **For 100 mm busbars** | **With connection kit for 185 mm busbars**

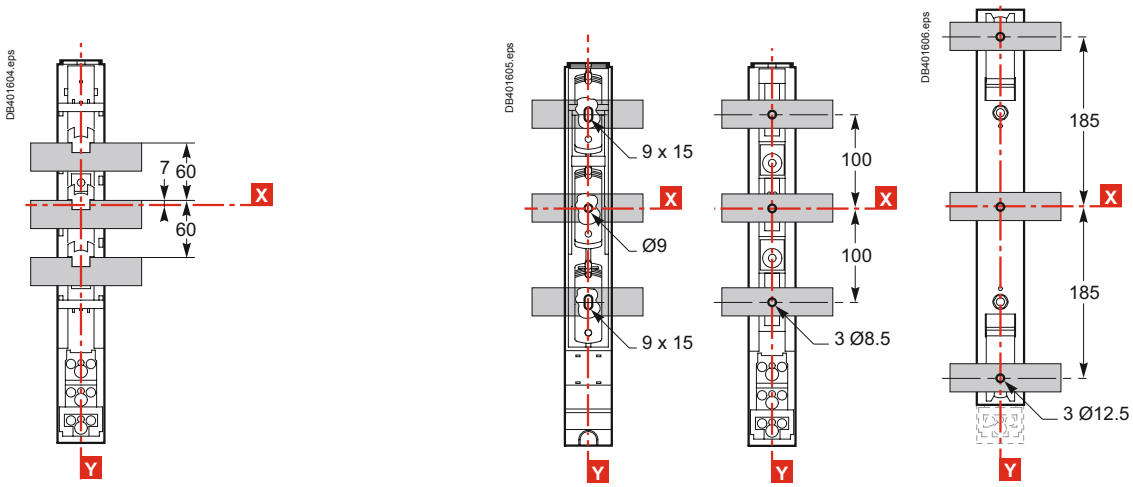

Schneider Electric

For 1 device with side cover and/or 1 free slot

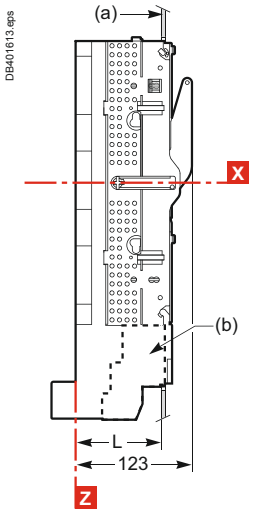

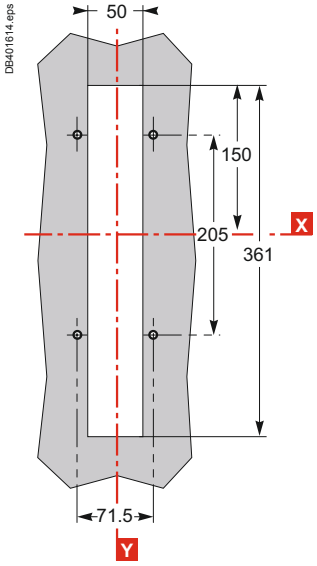

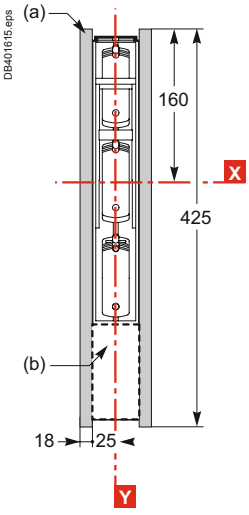

a = side cover for front panel cut-out.
b = terminal shield.

With length adapter

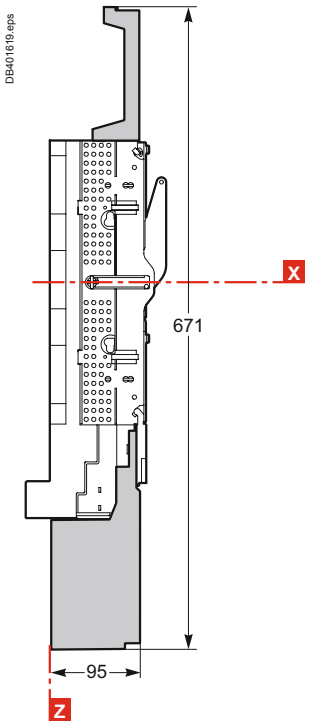

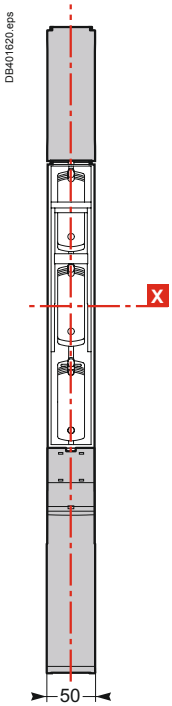

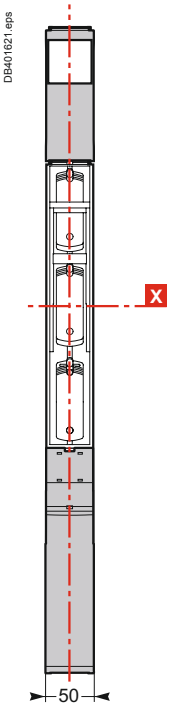

Fupact ISFL160
Connection and accessories

Connection

Connection via lugs/flexible bars

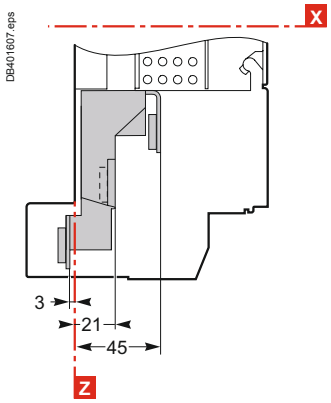

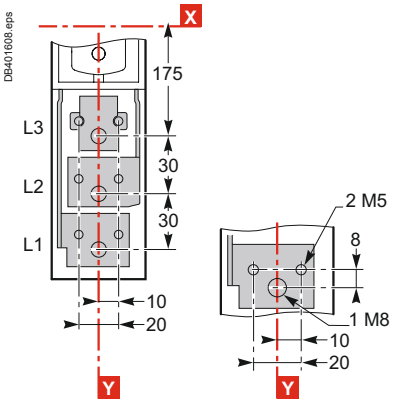

Connection via connectors

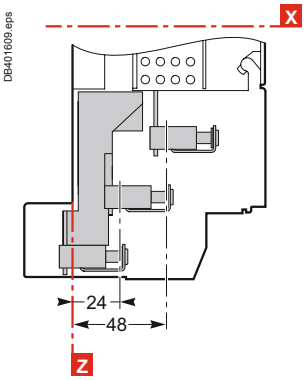

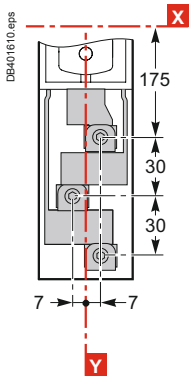

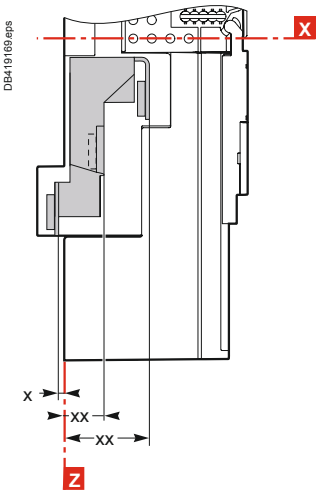

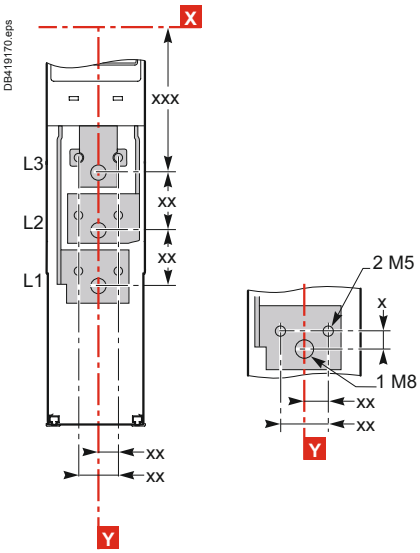

Current transformer

Direct connection to 100 mm busbars

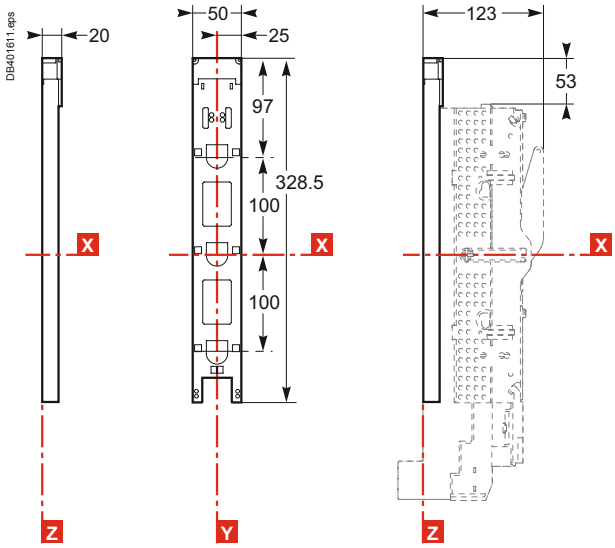

Dimensions

Fuse-carrier closed

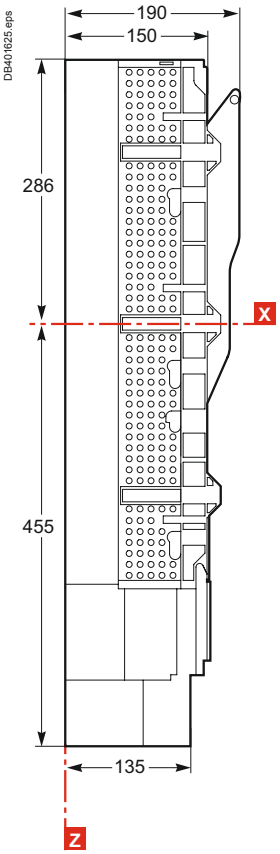

Front

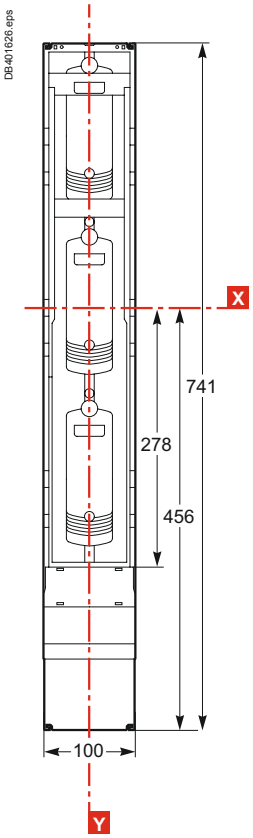

Open and locked

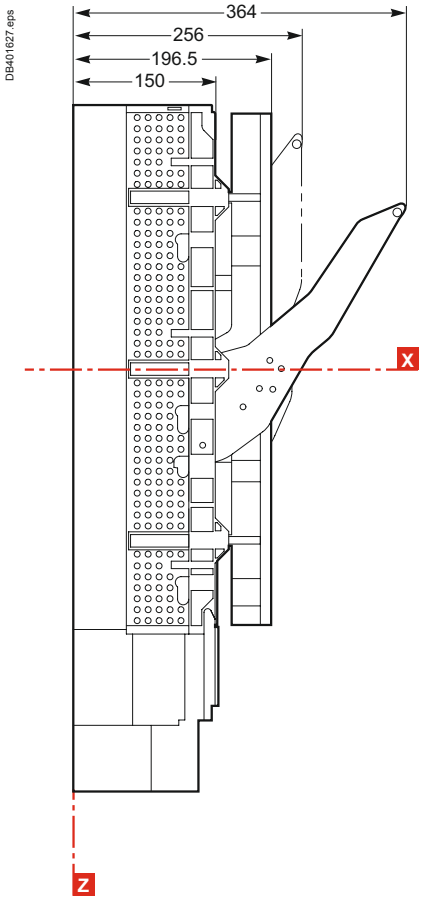

Mounting

For 185 mm busbars

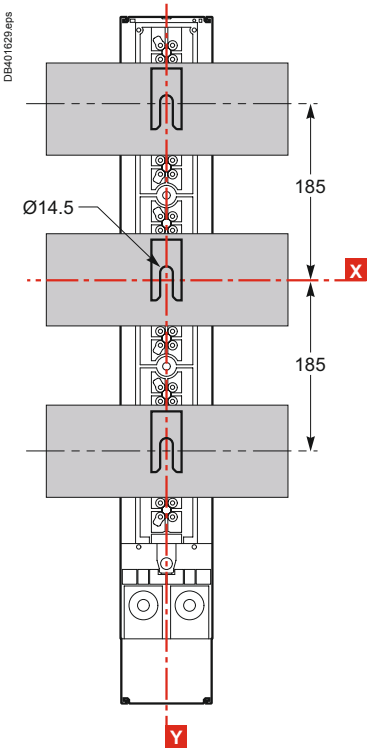

Fupact ISFL250 to 630
Dimensions and mounting

Device with side cover

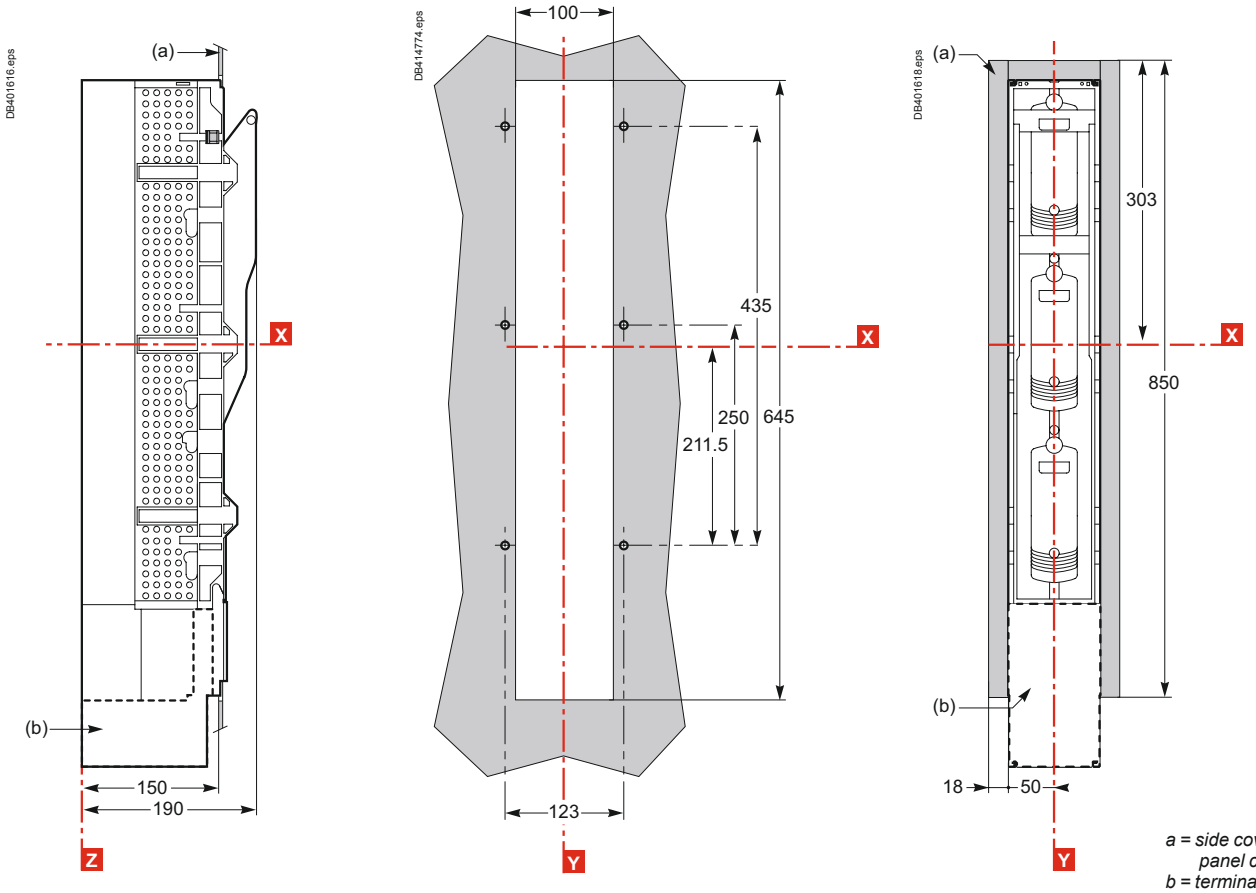

a = side cover for front panel cut-out.
b = terminal shield.

With measurement device

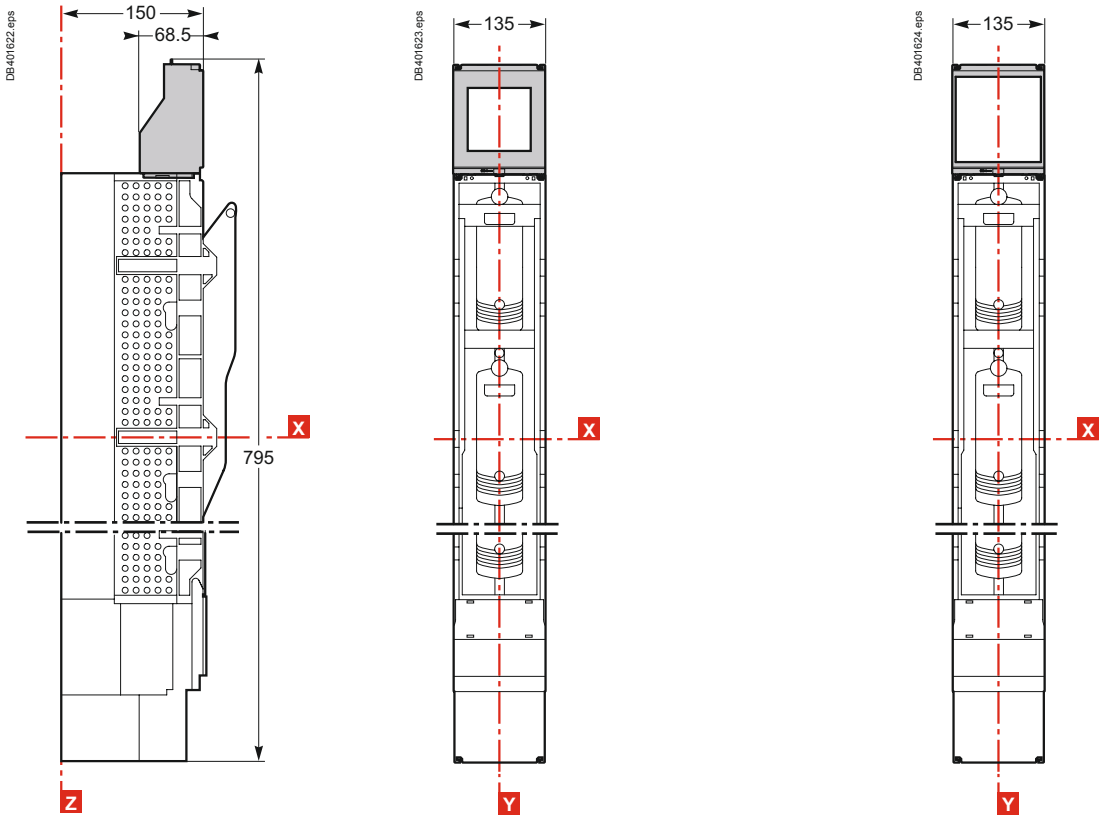

Dimensions

Fuse-carrier closed

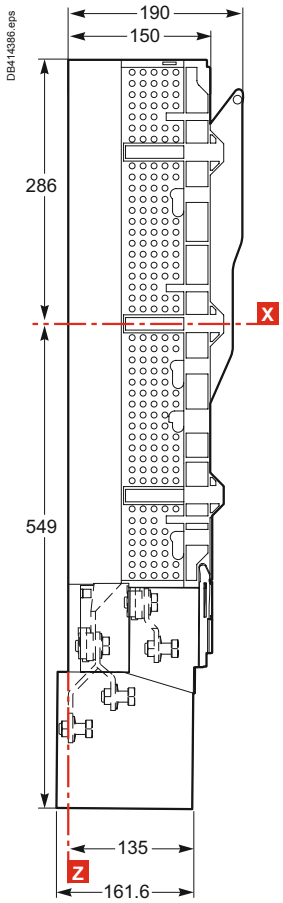

Front

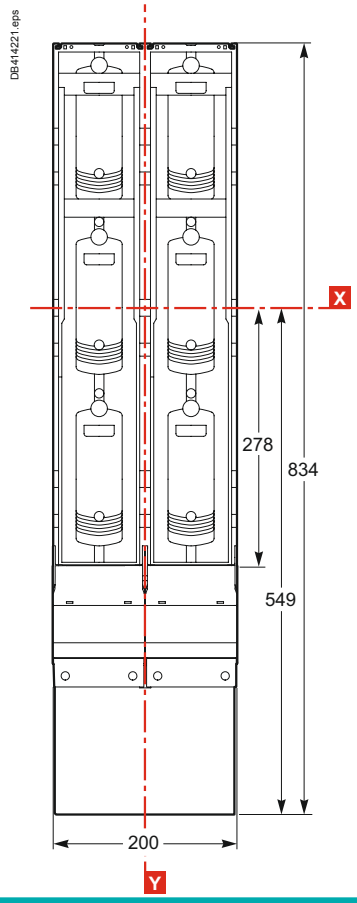

Open and locked

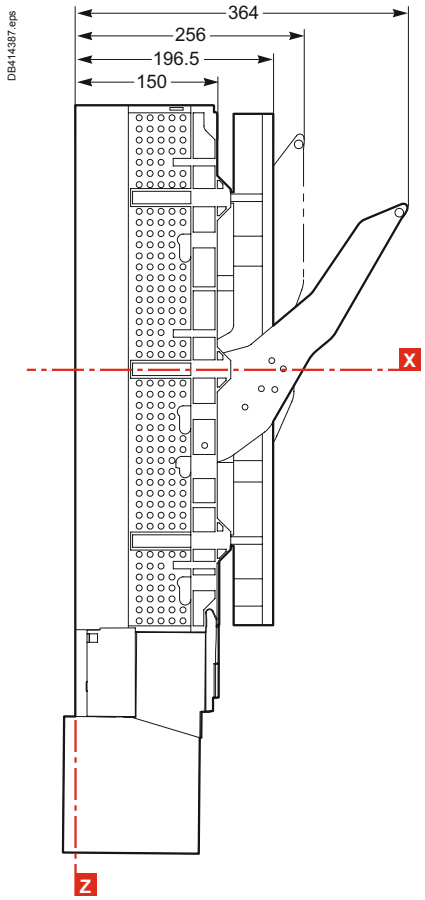

Mounting

For 185 mm busbars

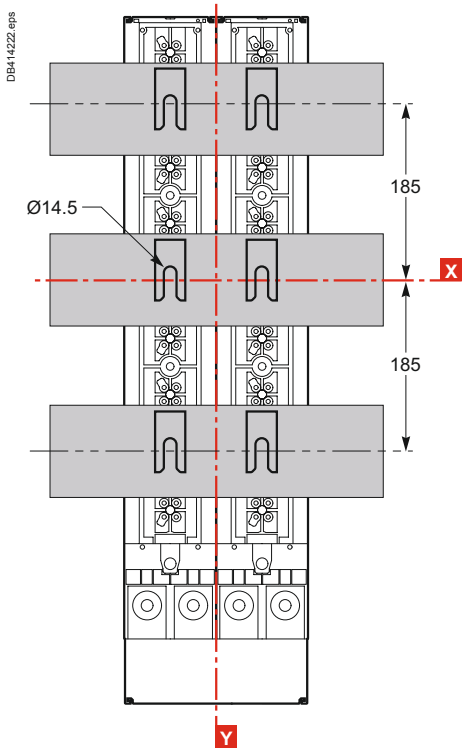

Fupact ISFL1250
Dimensions and mounting

Device with side cover

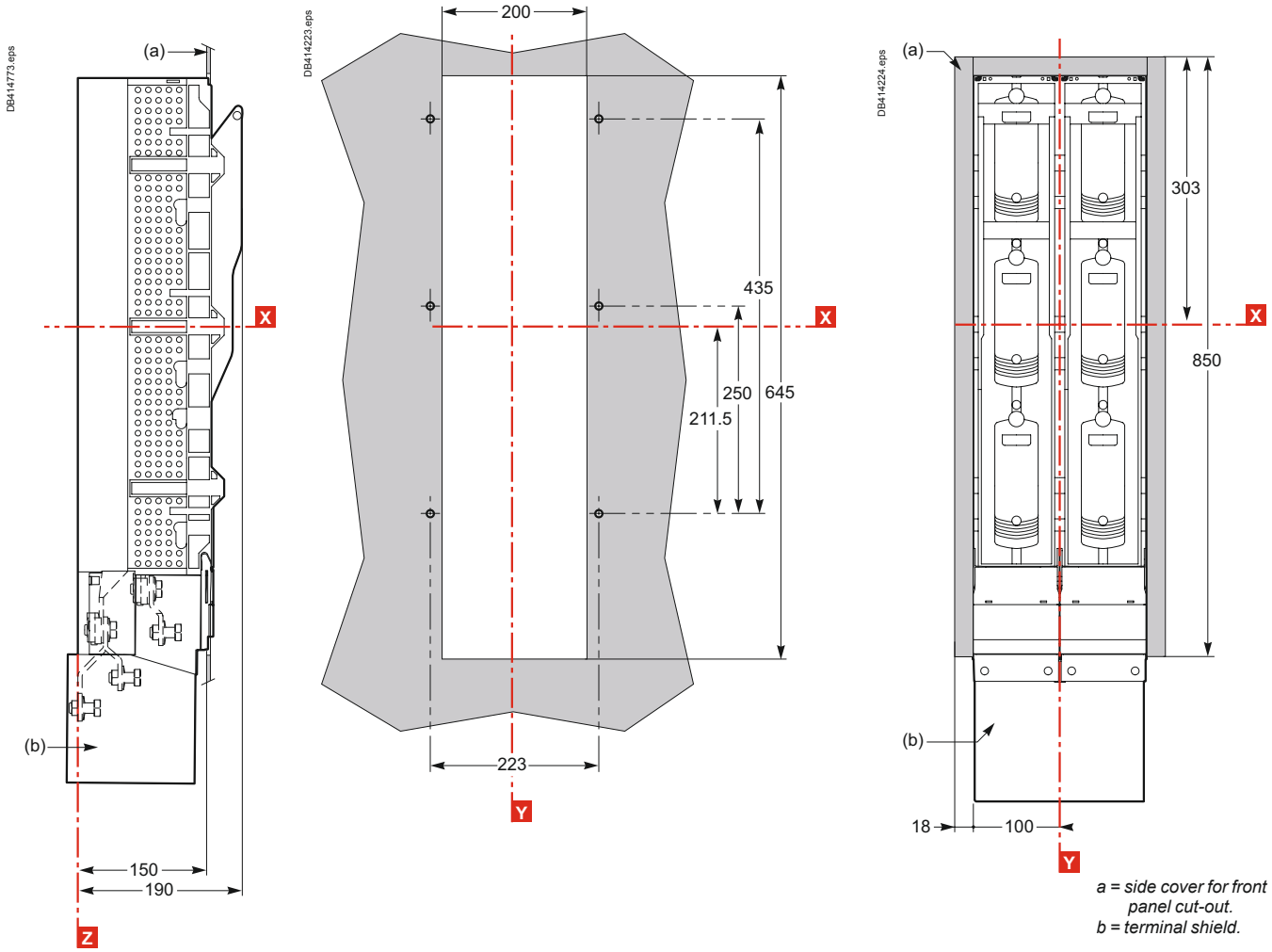

a = side cover for front panel cut-out.
b = terminal shield.

Connection

Connection via lugs/flexible bars

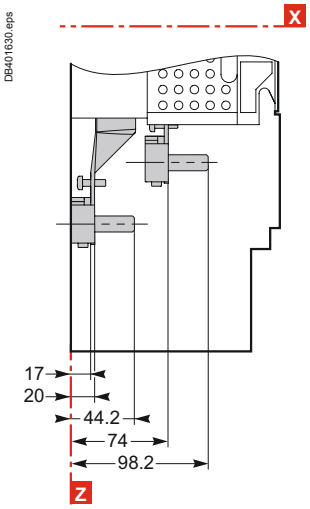

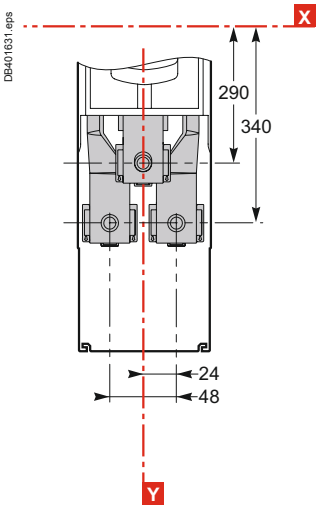

Connection via connectors

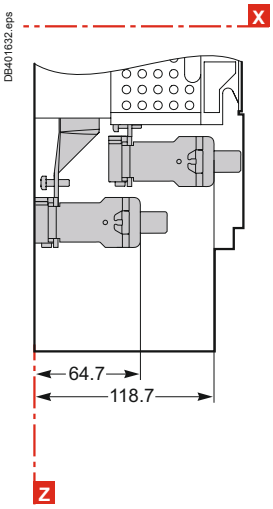

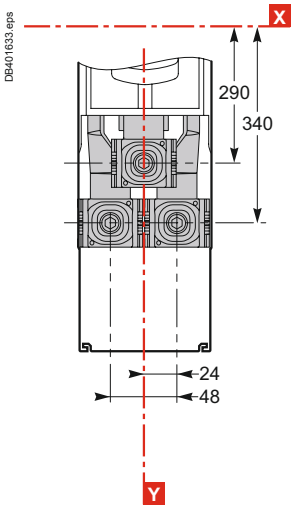

Current transformer

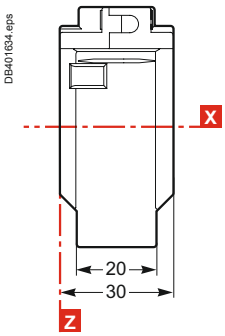

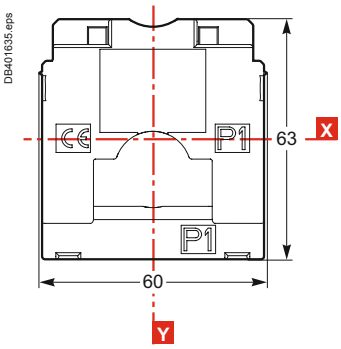

ISFT100N
Devices and accessories

ISFT100N 3P fixed front-connected

Basic device for mounting on a backplate

DB124904.eps

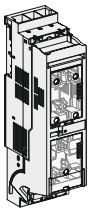

Connection via 2.5 to 50 mm² cable connectors		LV480750

Basic device for mounting on busbars

DB124905.eps

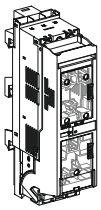

Hook-on connection to 60 mm busbars	Upstream distribution	LV480751
	Downstream distribution	LV480752

Accessories

DB120643.eps

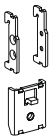

DIN rail fixing kit		LV480753

DB120650.eps

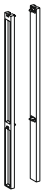

Support profile laterally attachable	Set of 2	LV480754

DB120651.eps

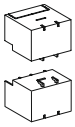

Terminal cover	Set of 2	LV480756

Electrical auxiliaries

DB120652.eps

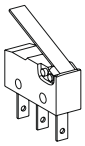

Auxiliary changeover contact NO + NC		LV480755

ISFT100 3P fixed front-connected

Basic device for mounting on a backplate

DB401324.eps

Connection via 1.5 to 50 mm² cable connectors	**49800**

Accessories

DB401325.eps

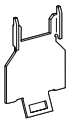

Accessory for mounting on a DIN rail	**49877**

DB401326.eps

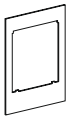

Escutcheon (not compatible with comb busbars)	For 1 device	**49878**
	For 2 devices	**49879**

Connection (accessories for 1.5 to 50 mm² cable connectors)

DB401327.eps

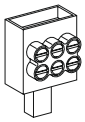

Distribution connector 3 x 10 mm²	Set of 3	**49860**

DB401328.eps

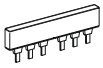

Comb busbar to supply 2 devices	**49861**

DB401329.eps

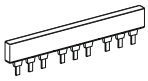

Comb busbar to supply 3 devices	**49862**

DB401330.eps

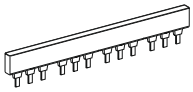

Comb busbar to supply 4 devices	**49863**

DB401331.eps

Incoming connector (25 to 95 mm²) for comb busbars	Set of 3	**49865**

DB401332.eps

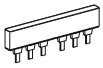

Comb busbar coupler to supply 5 devices (joins 2-device + 3-device comb)	**49890**

DB401333.eps

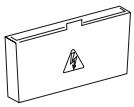

Insulated comb cover for free outgoer	**49864**

Electrical auxiliaries

DB414827.eps

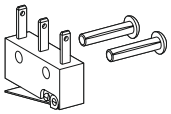

Auxiliary changeover contact NO + NC	**49885**

ISFT160
Devices and accessories

ISFT160 3P fixed front-connected

Basic device for mounting on a backplate

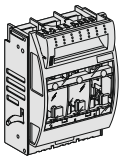
DB401334.eps

Connection via standard M8 terminals	**49803**
Connection via 1.5 to 50 mm² cable connectors	**49804**

Basic device for mounting on busbars

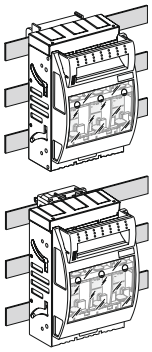
DB401335.eps

Push-on connection to 60 mm busbars	**49805**
Hook-on connection to 60 mm busbars	**49806**

Accessories

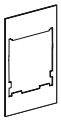
DB401336.eps

Escutcheon	For 1 device	**49881**
	For 1 device + 1 free outgoer	**49882**

Connection (terminal shields are mandatory for lugs)

DB401208.eps

Lugs for 95 mm² copper cables	Set of 3	**28951**

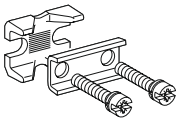
DB401337.eps

Connectors	distribution	3 x 16 mm²	Set of 3	**49867**
	for Cu/Al bare cables	1.5 x 95 mm²	Set of 3	**49866**
	for flexible bars	12 x 6 mm	Set of 3	**49868**

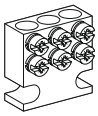
DB401338.eps

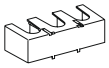
DB401339.eps

Long terminal shields	Set of 1	**49869**
Short terminal shields	Set of 1	**49880**

Electrical auxiliaries

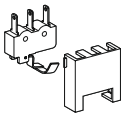
DB401340.eps

Auxiliary changeover contact NO+NC	**49883**

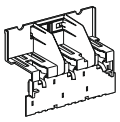
DB401341.eps

Blown fuse indication changeover contact NO+NC [(1)]	**49892**

Fuse monitor (to be mounted on all ISFT160 models)

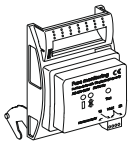
DB413573.eps

Fuse monitor	**49856**

(1) Used with DIN 00 blade type fuse-links as defined by standard IEC 60269-2-1, Annex A, section 1A, table B.

ISFT250 to ISFT630 3P fixed front-connected

Basic device for mounting on a backplate

DB401342.eps

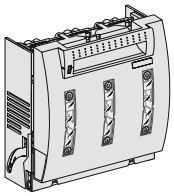

Connection via standard M10 terminals	ISFT250	**49813**
	ISFT400	**49819**
	ISFT630	**49825**

Basic device for mounting on busbars

DB401343.eps

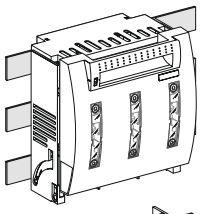

DB401344.eps

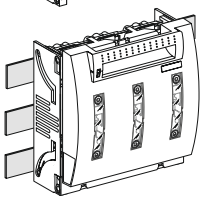

Push-on connection to 60 mm busbars	ISFT250	**49814**
Hook-on connection to 60 mm busbars	ISFT250	**49815**
	ISFT400	**49820**
	ISFT630	**49826**
Hook-on connection to 100 mm busbars	ISFT250	**49816**
	ISFT400	**49821**
	ISFT630	**49827**

Accessories

DB401344.eps

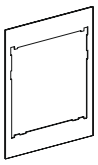

Escutcheon for 1 device	For ISFT250	**49884**
	For ISFT400	**49887**
	For ISFT630	**49889**
Escutcheon for 1 device + 1 free outgoer	For ISFT250	**49886**
	For ISFT400	**49888**

Connection (terminal shields are mandatory for lugs)

DB401208.eps

DB401345.eps

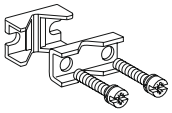

DB401346.eps

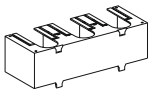

Lugs for 120 mm² copper cables			For ISFT250 to 630	Set of 3	**LV429252**
Lugs for 150 mm² copper cables			For ISFT250 to 630	Set of 3	**LV429253**
Lugs for 185 mm² copper cables			For ISFT250 to 630	Set of 3	**LV429254**
Lugs for 240 mm² copper cables			For ISFT400 to 630	Set of 3	**LV432500**
Lugs for 300 mm² copper cables			For ISFT400 to 630	Set of 3	**LV432502**
Connectors	for Cu/Al bare cables	6 to 150 mm²	For ISFT250	Set of 3	**49870**
		6 to 240 mm²	For ISFT400 to 630	Set of 3	**49873**
	for flexible bars	16 x 15 mm	For ISFT250	Set of 3	**49871**
		21 x 15 mm	For ISFT400 to 630	Set of 3	**49874**
Terminal shields			For ISFT250	Set of 1	**49872**
			For ISFT400	Set of 1	**49875**
			For ISFT630	Set of 1	**49876**

Electrical auxiliaries

DB401278.eps

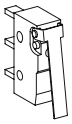

Auxiliary changeover contact NO+NC	**LV480874**

Fuse monitor (to be mounted on all ISFT250 to 630 models)

DB413574.eps

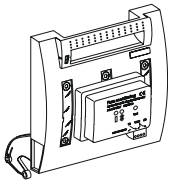

Fuse monitor	ISFT250	**49857**
	ISFT400	**49858**
	ISFT630	**49859**

ISFL160
Devices and accessories

ISFL160 1-pole switchable fixed front-connected

Basic device for mounting on busbars

DB419490.eps

Direct connection to 185mm busbars (M12)		LV480900

ISFL160 3-pole switchable fixed front-connected

Basic device for mounting on busbars

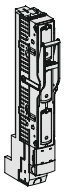
DB401216.eps

Direct hook-on connection to 60 mm busbars	Screws M8	LV480850
	Terminals 95 mm²	LV480851
Direct connection to 100 mm busbars	Screws M8	LV480852
	Terminals 95 mm²	LV480853

Conversion kit for connection to busbars (for ISFL160 direct connection)

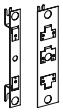
DB401237.eps

Direct connection to 185 mm busbars	LV480854
Direct connection to 185 mm busbars for 2 ISFL160 devices	LV480855

Accessories

DB401239.eps

DB401238.eps

Sideframe door cut out - 850 mm	LV480868
Sidewise angle bracket for side frame (x4)	LV480869

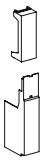
DB401240.eps

DB401241.eps

Length adaptor	LV480870
Empty plastic box (46 x 46 mm)	LV480878

DB401242.eps

Bank panel cover	LV480871

DB419491.eps

Contact hooks for ISFL 1-pole switchable	Set of 3	LV480905

Connection (accessories for standard M8 terminals)

DB401208.eps

Lugs for 95 mm² copper cables	Set of 3	28951

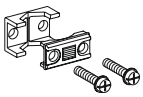
DB401243.eps

Connectors for Cu/Al bare cables 1.5 x 95 mm²	Set of 3	LV480861
for flexible bars 12 x 6 mm	Set of 3	LV480862

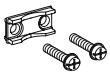
DB401244.eps

Electrical auxiliaries

DB401245.eps

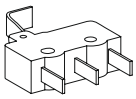

Auxiliary changeover contact NO + NC				**LV480873**

DB419492.eps

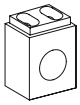

1 current transformer for ISFL 1-pole switchable	150/5 A class 1	5 VA	Set of 1	**LV480904**

DB401246.eps

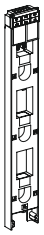

Single block with 3 current transformer for ISFL 3-pole switchable	150/5 A class 1	1.5 VA	Set of 1	**LV480881**
	150/1 A class 1	2.5 VA	Set of 1	**LV480882**
Single block with current transformer for ISFL 3-pole switchable	150/5 A class 1	1.5 VA	Set of 1	**LV480883**
	150/1 A class 1	2.5 VA	Set of 1	**LV480884**

DB401217.eps

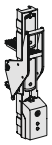

Fuse monitor for ISFL 3-pole switchable				**LV480877**

ISFL250 to ISFL1250
Devices and accessories

ISFL250 to ISFL630 1-pole switchable

Basic device for mounting on busbars

DB419493.eps

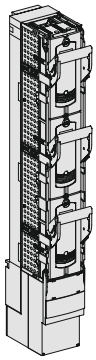

Direct connection to 185 mm busbars (screw M12)	ISFL250	**LV480901**
	ISFL400	**LV480902**
	ISFL630	**LV480903**

DB401249.eps

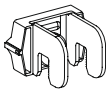

Hooks for mounting without drilling	**LV480859**

ISFL250 to ISFL630 3-pole switchable

Basic device for mounting on busbars

DB401247.eps

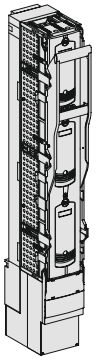

Direct connection to 185 mm busbars	ISFL250	**LV480856**
	ISFL400	**LV480857**
	ISFL630	**LV480858**
	ISFL1250	**LV480875**

DB401249.eps

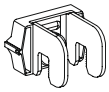

Hooks for mounting without drilling	**LV480859**

With fuse monitor

DB401248.eps

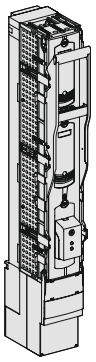

Fuse monitor (direct connection to 185 mm busbars)	ISFL250	**LV480863**
	ISFL400	**LV480864**
	ISFL630	**LV480865**
	ISFL1250	**LV480876**

Accessories

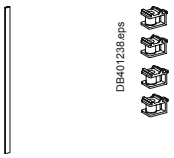

Sideframe door cut out - 850 mm		**LV480868**
Sidewise angle bracket for side frame	Set of 4	**LV480869**

Empty plastic box (72 x 72 mm)	**LV480879** (1)
Empty plastic box (96 x 96 mm)	**LV480880** (1)

Blank panel cover	**LV480872**

Connection (accessories for standard M12 terminals)

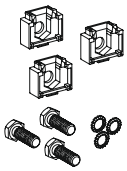

Connectors	For Cu/Al bare cable 1 x 35 to 300 mm²	Set of 3	**LV480867** (1)
	For Cu/Al bare cable 2 x 50 to 185 mm²	Set of 3	**49895** (1)
	4 x 240 mm²	Set of 3	**LV480890** (2)
Screws with plastic support		Set of 3	**LV480866** (1)

(1) Except for ISFL1250.
(2) Only for ISFL1250.

Electrical auxiliaries

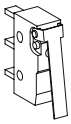

Auxiliary changeover contact NO + NC	**LV480874**

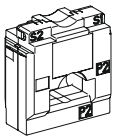

Current transformer	150/5 class 1	2.5 VA	Set of 1	**LV480885**
	250/5 class 1	5 VA	Set of 1	**LV480886**
	400/5 class 1	5 VA	Set of 1	**LV480887**
	600/5 class 1	5 VA	Set of 1	**LV480888**
Click-lock cable transformers			Set of 1	**LV480889**

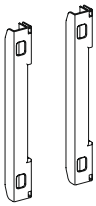

Fupact protection components

Cartridge fuses type aM

For protection of equipment with current peaks

DB401503.eps

DF2 CA●●●

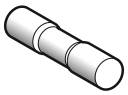

DB401504.eps

DF2 EA●●●

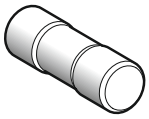

DB401506.eps

DF2 FA●●

Fuse type	Maximum rated voltage	Rating	Sold in lots of	Fuses without striker		Fuses with striker	
				Unit reference	Weight	Unit reference	Weight
	V	A			kg		kg
Cylindrical 10 x 38	∼ 400	20	10	**DF2 CA20**	0.010	–	–
		25	10	**DF2 CA25**	0.010	–	–
		32	10	**DF2 CA32**	0.010	–	–
Cylindrical 14 x 51	∼ 500	20	10	**DF2 EA20**	0.020	**DF3 EA20**	0.020
		25	10	**DF2 EA25**	0.020	**DF3 EA25**	0.020
		32	10	**DF2 EA32**	0.020	**DF3 EA32**	0.020
		40	10	**DF2 EA40**	0.020	**DF3 EA40**	0.020
	∼ 400	50	10	**DF2 EA50**	0.020	**DF3 EA50**	0.020
Cylindrical 22 x 58	∼ 690	20	10	**DF2 FA20**	0.045	**DF3 FA20**	0.045
		25	10	**DF2 FA25**	0.045	**DF3 FA25**	0.045
		32	10	**DF2 FA32**	0.045	**DF3 FA32**	0.045
		40	10	**DF2 FA40**	0.045	**DF3 FA40**	0.045
		50	10	**DF2 FA50**	0.045	**DF3 FA50**	0.045
	∼ 500	63	10	**DF2 FA63**	0.045	**DF3 FA63**	0.045
		80	10	**DF2 FA80**	0.045	**DF3 FA80**	0.045
		100	10	**DF2 FA100**	0.045	**DF3 FA100**	0.045
	∼ 400	125	10	**DF2 FA125**	0.045	**DF3 FA125**	0.045

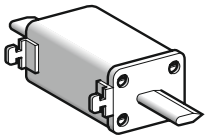

DF533330.eps

DF2 GA●●●●

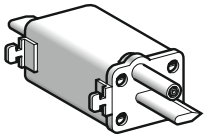

DF533331.eps

DF4 GA●●●●

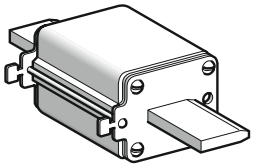

DF533332.eps

DF2 JA●●●●

Fuse type	Maximum rated voltage	Rating	Sold in lots of	Fuses without striker		Fuses with striker	
				Unit reference	Weight	Unit reference	Weight
	V	A			kg		kg
Blade size 000	∼ 690	25	3	**DF2 FGA25**	0.160	–	–
		32	3	**DF2 FGA32**	0.160	–	–
		40	3	**DF2 FGA40**	0.160	–	–
		50	3	**DF2 FGA50**	0.160	–	–
		63	3	**DF2 FGA63**	0.160	–	–
Blade size 00	∼ 690	80	3	**DF2 FGA80**	0.160	–	–
		100	3	**DF2 FGA100**	0.160	–	–
		125	3	**DF2 FGA125**	0.160	–	–
Blade size 0	∼ 690	50	3	**DF2 GA1051**	0.230	–	–
		63	3	**DF2 GA1061**	0.230	–	–
		80	3	**DF2 GA1081**	0.230	–	–
		100	3	**DF2 GA1101**	0.230	–	–
		125	3	**DF2 GA1121**	0.230	**DF4 GA1121**	0.230
		160	3	**DF2 GA1161**	0.230	**DF4 GA1161**	0.230
	∼ 500	200	3	**DF2 GA1201**	0.230	**DF4 GA1201**	0.230
Blade size 1	∼ 690	160	3	**DF2 HA1161**	0.400	–	–
		200	3	**DF2 HA1201**	0.400	**DF4 HA1201**	0.400
		250	3	**DF2 HA1251**	0.400	**DF4 HA1251**	0.400
	∼ 500	315	3	**DF2 HA1311**	0.400	**DF4 HA1311**	0.400
Blade size 2	∼ 690	250	3	**DF2 JA1251**	0.560	–	–
		315	3	**DF2 JA1311**	0.560	**DF4 JA1311**	0.560
		400	3	**DF2 JA1401**	0.560	**DF4 JA1401**	0.560
	∼ 500	500	3	**DF2 JA1501**	0.560	**DF4 JA1501**	0.560
Blade size 3	∼ 690	400	3	**DF2 KA1401**	0.850	–	–
		500	3	**DF2 KA1501**	0.850	**DF4 KA1501**	0.850

Cartridge fuses type gG

For protection of circuits without significant current peaks

DB401511.eps

DF2 CN●●

DB401512.eps

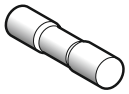

DF2 EN●●

DB401514.eps

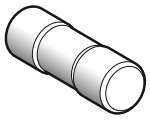

DF2 FN●●

Fuse type	Maximum rated voltage	Rating	Sold in lots of	Fuses without striker		Fuses with striker	
				Unit reference	Weight	Unit reference	Weight
	V	A			kg		kg
Cylindrical 10 x 38	∼ 500	20	10	**DF2 CN20**	0.010	**–**	–
	∼ 400	25	10	**DF2 CN25**	0.010	**–**	–
		32	10	**DF2 CN32**	0.010	**–**	–
Cylindrical 14 x 51	∼ 500	20	10	**DF2 EN20**	0.020	**DF3 EN20**	0.020
		25	10	**DF2 EN25**	0.020	**DF3 EN25**	0.020
		32	10	**DF2 EN32**	0.020	**DF3 EN32**	0.020
		40	10	**DF2 EN40**	0.020	**DF3 EN40**	0.020
	∼ 400	50	10	**DF2 EN50**	0.020	**–**	–
Cylindrical 22 x 58	∼ 690	20	10	**DF2 FN20**	0.045	**DF3 FN20**	0.045
		25	10	**DF2 FN25**	0.045	**DF3 FN25**	0.045
		32	10	**DF2 FN32**	0.045	**DF3 FN32**	0.045
		40	10	**DF2 FN40**	0.045	**DF3 FN40**	0.045
		50	10	**DF2 FN50**	0.045	**DF3 FN50**	0.045
	∼ 500	63	10	**DF2 FN63**	0.045	**DF3 FN63**	0.045
		80	10	**DF2 FN80**	0.045	**DF3 FN80**	0.045
		100	10	**DF2 FN100**	0.045	**DF3 FN100**	0.045

DF533333.eps

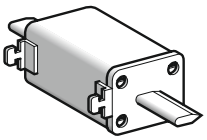

DF2 GN●●●●

DF533334.eps

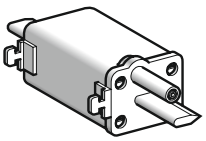

DF4 GN●●●●

DF533335.eps

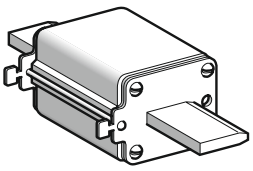

DF2 JN●●●●

Fuse type	Maximum rated voltage	Rating	Sold in lots of	Fuses without striker		Fuses with striker	
				Unit reference	Weight	Unit reference	Weight
	V	A			kg		kg
Blade size 000	∼ 690	25	10	**DF2 FGN25**	0.160	**–**	–
		32	10	**DF2 FGN32**	0.160	**–**	–
		40	10	**DF2 FGN40**	0.160	**–**	–
		50	10	**DF2 FGN50**	0.160	**–**	–
		63	10	**DF2 FGN63**	0.160	**–**	–
		80	10	**DF2 FGN80**	0.160	**–**	–
Blade size 00	∼ 690	100	10	**DF2 FGN100**	0.160	**–**	–
		125	10	**DF2 FGN125**	0.160	**–**	
	∼ 500	160	10	**DF2 FGN160**	0.160	**–**	–
Blade size 0	∼ 690	50	3	**DF2 GN1051**	0.230	**–**	–
		63	3	**DF2 GN1061**	0.230	**–**	–
		80	3	**DF2 GN1081**	0.230	**–**	–
		100	3	**DF2 GN1101**	0.230	**–**	–
		125	3	**DF2 GN1121**	0.230	**–**	–
		160	3	**DF2 GN1161**	0.230	**–**	–
	∼ 500	125	3	**–**	–	**DF4 GN1121**	0.230
		160	3	**–**	–	**DF4 GN1161**	0.230
Blade size 1	∼ 690	160	3	**DF2 HN1161**	0.400	**–**	–
		200	3	**DF2 HN1201**	0.400	**DF4 HN1201**	0.400
	∼ 500	250	3	**DF2 HN1251**	0.400	**DF4 HN1251**	0.400
Blade size 2	∼ 690	250	3	**DF2 JN1251**	0.560	**–**	–
		315	3	**DF2 JN1311**	0.560	**DF4 JN1311**	0.560
	∼ 500	400	3	**DF2 JN1401**	0.560	**DF4 JN1401**	0.560
Blade size 3	∼ 690	500	3	**–**	–	**DF4 KN1501**	0.850
	∼ 500	500	3	**DF2 KN1501**	0.850	**–**	–
		630	3	**DF2 KN1631**	0.850	**DF4 KN1631**	0.850